3rd October 2023

01. interior trims

02. equipment

03. tyres

04. batteries and engines

05. dimensions

01. interior trims

start

advance (start +)

02. equipment

start

technology
- radio with DAB, Bluetooth and USB
- 6-speed gearbox
- ESC (Electronic Stability Control) with Grip Xtend, Hill Start Assist and Trailor Swing Assist
- trip computer - multi-functional

interior
- closed glove box
- 2 cup holders on centre console
- driver's seat - height adjustable and lumbar adjustment (panel van versions)
- steering wheel - height adjustment
- electric front windows
- passenger bench seat
- overhead parcel shelf
- kaleido - dark grey upholstery

exterior
- left side loading door - unglazed
- 80-litre fuel tank
- 22-litre AdBlue tank
- c-shaped DRL's (daytime running lights)
- door mirrors - electric adjustment, heated
- 16" steel wheels with small wheel stylers
- rear doors - unglazed, 180°
- spare wheel

safety and security
- alarm - Thatcham approved category 1, volumetric and perimeter
- side wind assist
- full-steel bulkhead
- ABS with EBD (Electronic Brake force Distribution)
- electronic immobiliser
- remote central locking (foldable 2 button key)
- airbag - driver
- seatbelts - 3 point height-adjustable seatbelts with pretensioners
- seatbelt warning - driver and passenger
- 4 disc brakes
- automatic headlights and wipers
- deadlocking
- rear running board and handles
- anchorage points : L1 - 6, L2 - 8, L3 - 10
  Weight allowed per anchorage point: approximately 500kg'

RWD additional equipment
- rear step
- side marker lights (LWB or MWB with extended overhang only)
- CAN interface

advance (start +)

interior
- manual air conditioning and pollen filter
- electric front windows
- driver's seat - fully adjustable suspension type with armrest (panel vans only)
- interior chrome trim
- pivoting seatback table with dual split underseat storage compartment

exterior
- 16" steel wheels with large wheel stylers
- chrome trim on front grille

safety and Security
- wide view mirror
- key - 3 button key
- rear parking sensors

Master E-Tech advance
- E-Tech electric charging socket (right-hand side)
- E.V. Voice: emits a distinctive range of sounds signalling that the vehicle is moving
- engine speed limiter 62 mph
- standard charging cable 32A (IEC 62196 - Type 2 Mennekes) 6m
- tyre repair kit (replaces spare wheel)
- manual air conditioning with pollen filter

03. tyres

	Euro 6d Full emissions standards				Euro 6VI emissions standards				E-Tech electric
type	**summer**		**all-weather**		**summer**		**all-weather**		**summer**
									E-Tech
GVWR	2.8 t, 3.3 t and 3.5 t		2.8 t, 3.3 t and 3.5 t	3.5 t	3.5 t	3.5 t and 4.5 t	2.8 t, 3.3 t and 3.5 t	3.5 t and 4.5 t	3.5 t
transmission	front-wheel drive		front-wheel drive	front-wheel drive	rear-wheel drive single wheels	rear-wheel drive twin wheels	front-wheel drive	rear-wheel drive twin wheels	front-wheel drive
tyres/wheel size	225/65R16			225/65R16	235/65R16	195/75R16	225/65R16	195/75R16	215/65R16
make	Bridgestone Duravis	Continental Vancontact	Continental Vancontact 4 Seasons	Continental Vancontact	Michelin Agilis	Continental Vancontact	Continental Vancontact 4 Seasons	Continental Vancontact 4 Seasons	Continental Vancontact
fuel efficiency class	A	A	B	A	B	B	B	E	A
wet grip class	A	A	A	A	A	A	A	C	A
exterior noise (dB)	72	72	73	72	72	72	73	72	72

04. batteries and engines

	dCi 135 BVM6 N1	Blue dCi 150 BVM6/BVR6* N1	E-Tech 100% eletric
power (hp/kW)	135/100	150/110	76/57
engine capacity (cc)	2298	2298	N/A
stop & start	No	Yes	No
engine speed at max. power (rpm)	3,500	3,500	N/A
torque (N.m)	360	385	210
engine speed at max. torque (rpm)	1,500	1,500	N/A
top speed (mph)	94	97	62
0-62 mph (s)	13.5	12.1	TBC
fuel tank capacity - gallons (l)	21.1 (80)		-
battery capacity (kWh)	-	-	52
AdBlue® tank capacity (l) (1)	22		-
BIO-fuel type	B7, B10, XTL		-
HVO type	HVO100 compliant		-

(1) actual fuel and AdBlue® consumption depends on vehicle use, equipment, the user's driving style and loading. (2) WLTP figures shown are for comparability purposes; only compare figures with vehicles tested to the same technical procedures. Actual real world driving results may vary depending on factors such as weather conditions, driving styles, vehicle load or any accessories fitted after registration. WLTP is a new test used for fuel consumption and CO_2 figures. Please visit renault.co.uk/configure for WLTP figures for any selected options.
*BVR6 automatic gearbox engine data.

	Blue dCi 145	dCi 130	Blue dCi 145	E-Tech 100% electric
type of bodywork	all FWD vans and conversions	RWD conversions	all RWD vans and conversions	all FWD vans and conversions
certification category	N1	N1	N1	N1
wheels	SW	SW/TW	SW/TW	SW
power (hp/kW)	145/107	130/96	145/107	76/57
engine capacity (cc)	2298	2298	2298	N/A
stop & start	Yes	No	Yes	No
engine speed at max. power (rpm)	3,500	3,500	3,500	N/A
torque (N.m)	360	330	360	225
engine speed at max. torque (rpm)	1,500	1,500	1,500	N/A
top speed (mph)	95	92	93	62
fuel tank capacity - gallons (l)	21.1 (80)			-
battery capacity (kWh)	-	-	-	52
AdBlue® tank capacity (l) (1)	22			-
BIO-fuel type	B7, B10, XTL			
HVO type	HVO100 compliant			

(1) actual fuel and AdBlue® consumption depends on vehicle use, equipment, the user's driving style and loading. (2) WLTP figures shown are for comparability purposes; only compare figures with vehicles tested to the same technical procedures. Actual real world driving results may vary depending on factors such as weather conditions, driving styles, vehicle load or any accessories fitted after registration. WLTP is a new test used for fuel consumption and CO2 figures. Please visit renault.co.uk/configure for WLTP figures for any selected options.
^ all chassis comes with Rustproofing underneath the chassis - Cataphoresis (zinc phosphating paint bath), Mastic sealant & anti-gravel packing, Painting = primer + several layer painting.

05. dimensions

front-wheel drive panel van

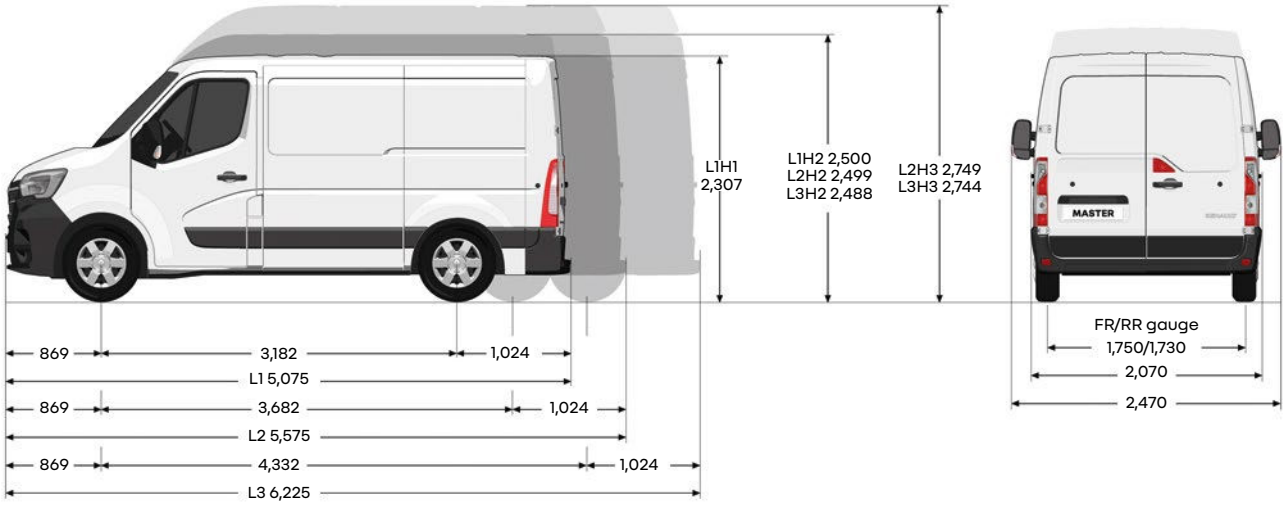

weights and loads front-wheel drive panel van (kg)

	effective volume (m³)		GVM
			3.5 t Master E-Tech electric
L2H2	10.8	min. kerb weight [1]	2,080
		max. payload [2]	1,420
		roof payload	200
		max. load on front axle	1,850
		max. load on rear axle	2,100
L3H2	13	min. kerb weight [1]	2,192
		max. payload [2]	1,308
		roof payload	200
		max. load on front axle	1,850
		max. load on rear axle	2,100

weights and dimensions

GVW	L1H1		L1H2	L2H2				L2H3	L3H2		L3H3
	start 2.8t	advance 2.8t	start 3.5t	start 3.3t	advance 3.3t	start 3.5t	advance 3.5t	start 3.5t	start 3.5t	advance 3.5t	start 3.5t
effective Volume (m^3)	8		9	10.8				12.3	13		14.8
min. kerb weight	1,927	1,952	1,949	2,021	2,046	2,021	2,046	2,046	2,116	2,141	2,123
max. Payload	837	848	1,551	1,279	12,254	1,479	1,454	1,454	1,384	1,359	1,377
roof Payload	150		150	200				200	200		200
max. load on front axle	1,550	1,550	1,850	1,850	1,850	1,850	1,850	1,850	1,850	1,850	1,850
max. load on rear axle	1,650	1,650	2,100	2,100	2,100	2,100	2,100	2,100	2,100	2,100	2,100
max. towing weight (braked / unbraked)	2,500/750			2,500/750					2,500/750		
turning circle, kerb to kerb	12.0 m			13.6 m				13.6 m	15.7 m	13.6 m	15.7 m
turning circle, wall to wall	12.5 m			14.1 m				14.1 m	16.2 m	14.1 m	16.2 m

interior dimensions front-wheel drive panel van (mm)

	L1H1	L1H2	L2H2	L2H3	L3H2	L3H3
loading area						
effective length	2,583		3,083		3,733	
effective length at 1.1 m	2,530		3,030		3,680	
effective width			1,765			
width between wheel arches			1,380			
effective height	1,700	1,894		2,144	1,894	2,144
sliding side door(s)						
width of sliding side door(s)	1,050			1,270		
height of sliding side door(s)	1,581			1,780		
rear door						
width (169 mm from floor)			1,580			
entrance height	1,627			1,820		
loading sill (min./max.)	546/564	544/563	545/562	543/560	543/557	542/555
ground clearance (min)	182		174	173	172	169

(1) the kerb weight is the weight of the vehicle without the driver and with the fuel tank filled to 90%. This weight may vary according to the equipment and engine (by up to 330 kg).
(2) the payload is calculated as the difference between the Gross Vehicle Weight (GVW) and the kerb weight.

05. dimensions

rear-wheel drive panel van

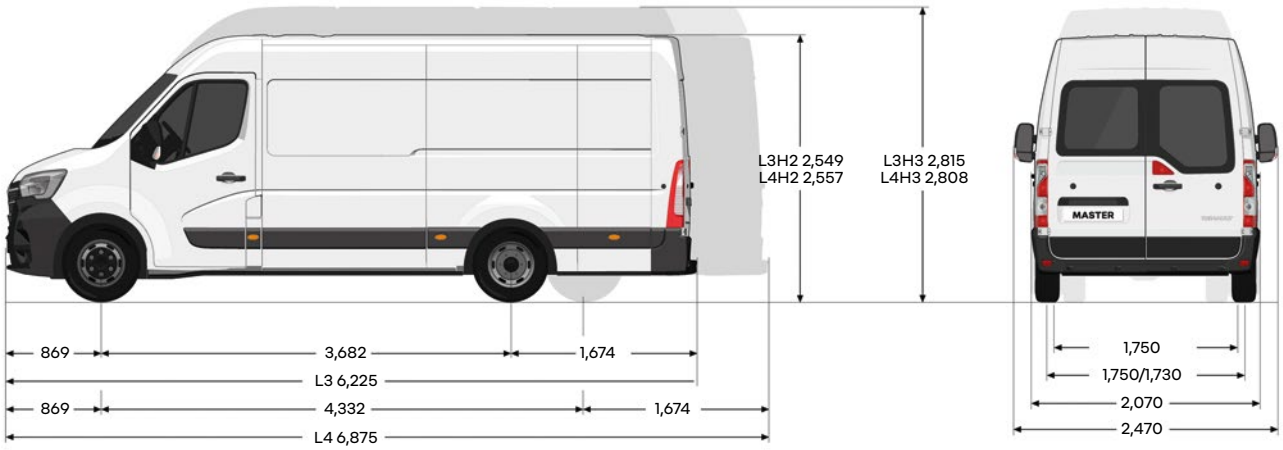

weights and loads rear-wheel drive panel van (kg)

	effective volume (m³)		GVM
			3.5 t SW
L3H2 long overhang	14.9	min. kerb weight (1)	2,343
		max. payload (2)	1,157
		roof payload	200
L3H3 long overhang	13	min. kerb weight (1)	2,192
		max. payload (2)	1,308
		roof payload	200
L3H2 long overhang SW/L3H3 long overhang SW		max. load on front axle	1,850
		max. load on rear axle	2,300
		max. towing weight (braked/unbraked)	2,500/750
		turning circle, kerb to kerb 14.1 m	13.6-15.7
		turning circle, wall to wall 13.6 m	14.1-16.2

(1) the kerb weight is the weight of the vehicle without the driver and with the fuel tank filled to 90%. This weight is given for the basic version and may vary according to the equipment and engine (by up to 330 kg). (2) the payload is calculated as the difference between the Gross Vehicle Weight (GVW) and the kerb weight.

interior dimensions rear-wheel drive panel van (mm)

	L3H2 long overhang SW		L3H2 long overhang SW
loading area			
effective length		4,383	
effective length at 1.1 m		4,330	
effective width		1,765	
width between wheel arches		1,380	
effective height	1,798		2,048
sliding side door(s)			
width of sliding side door(s)		1,270	
height of sliding side door(s)		1,684	
rear door			
width (169 mm from floor)		1,580	
entrance height		1,724	
loading sill (min./max.)	682/704		680/702
ground clearance (min)		167	

SW: single wheels. TW: twin wheels.

05. dimensions

luton box van

front-wheel drive

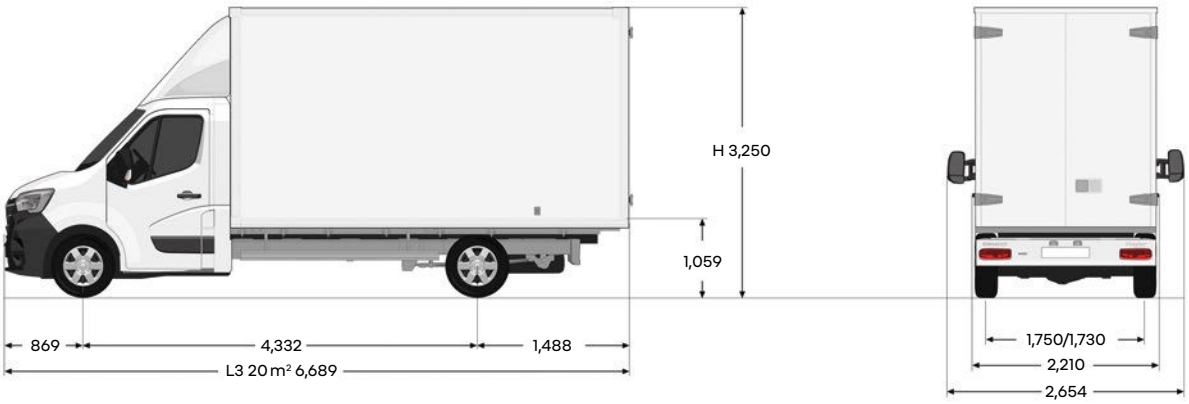

box van weights and loads (kg)

	max. payload (kg)	effective volume (m³)
GVW	3.5 t	
L3 front-wheel drive 20 m³	1,204	20.1

SW: single wheels.

box van interior dimensions (mm)

	20 m³ on L3
transmission mode	front wheel drive box van
box van module	
effective length	4,065
effective width	2,040
effective height	2,186

05. dimensions

tipper

front-wheel drive

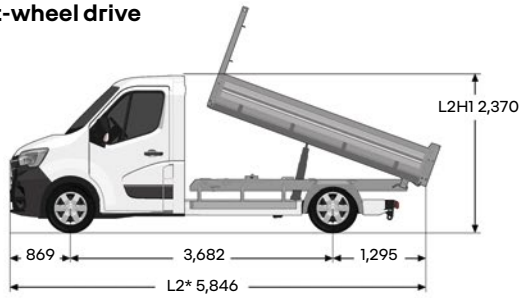

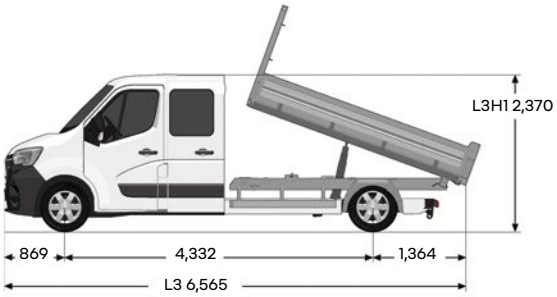

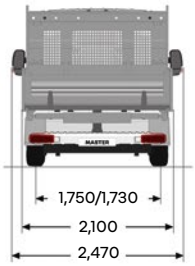

rear-wheel drive

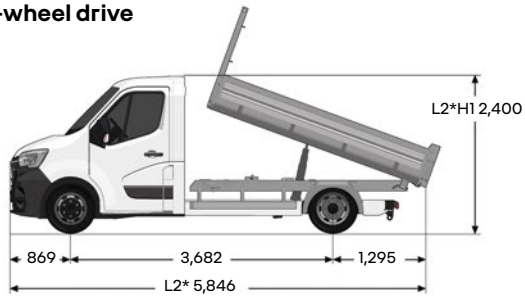

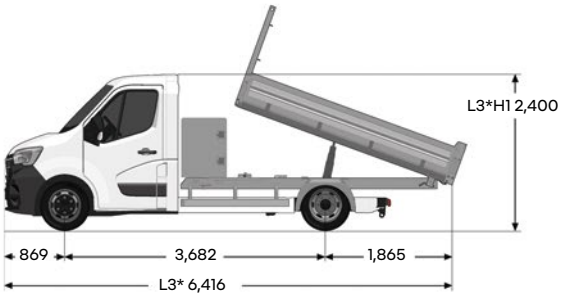

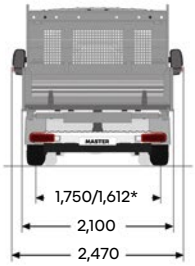

* twin wheels.

tipper weights and loads (kg)

	max. payload	
cab type	single	double
GVW	3.5 t	3.5 t
L2 front-wheel drive with 3.3 m tipper	1,217	-
L2 SW rear-wheel drive with 3.3 m tipper	1,104	-
L2 TW rear-wheel drive with 3.3 m tipper	934	-
L3 TW rear-wheel drive with 3.2 m tipper + boot	820	-
L3 SW rear-wheel drive double cab with 3.3 m tipper	-	890
L2 TW rear-wheel drive double cab long overhang with 3.2 m tipper	-	825*

* prohibits triverse option.

single cab tipper dimensions (mm)

	L2 3.3 m		L3 3.2 m + boot	
	SW	SW	TW	TW
transmission mode	front-wheel drive	rear-wheel drive		
effective length	3,205			3,105
effective width	2,040			
side panel height	400			
euro pallets capacity	6			5
max. rear loading sill	1,020		1,080	

panel thickness: 20 mm. flatbed thickness: 2.5 mm. SW: single wheels. TW: twin wheels.

double cab tipper dimensions (mm)

	L3 SW 3.3 m	L3 TW 3.3 m
transmission mode	rear-wheel drive	rear-wheel drive
effective length	3,205	3,105
effective width	2,040	
side panel height	400	
euro pallets capacity	6	5
max. rear loading sill	1,020	1,080

panel thickness: 20 mm. flatbed thickness: 2.5 mm. SW: single wheels. TW: twin wheels.

05. dimensions

dropside

front-wheel drive

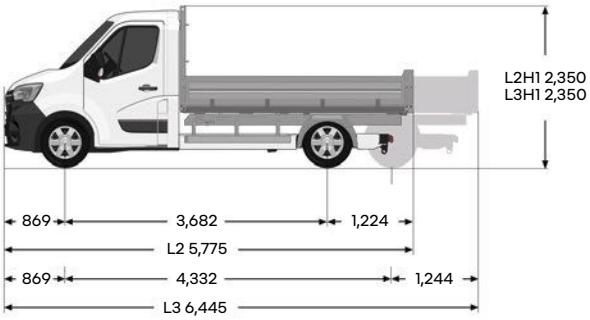

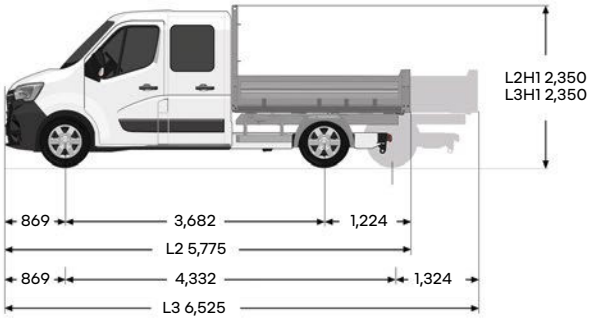

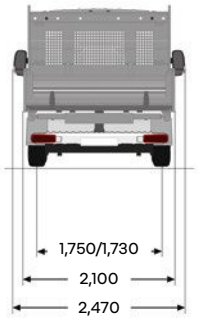

rear-wheel drive

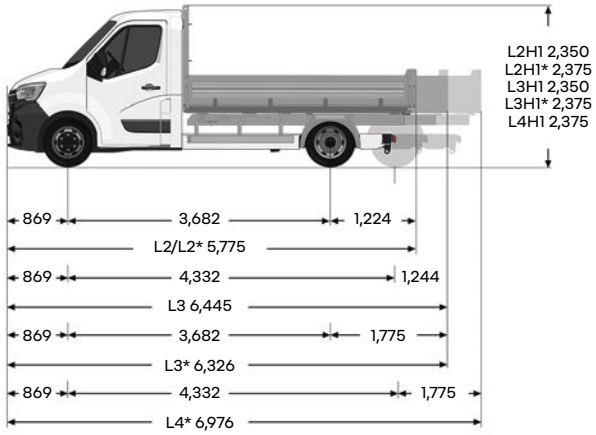

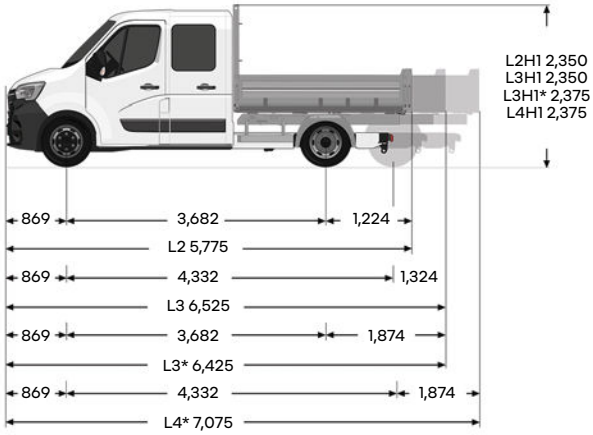

* twin wheels.

dropside weights and loads (kg)

	max. payload	
cab type	single	double
GVW	3.5 t	3.5 t
L2 front-wheel drive	1,399	-
L3 front-wheel drive	1,333	1,206
L3 SW rear-wheel drive	1,190	-

SW: single wheels. TW: twin wheels.

single cab dropside dimensions (mm)

	L2 SW	L3 SW
transmission mode	front-wheel drive	front-wheel drive
effective length	3,170	3,840
effective width	2,040	
side panel height	400	
euro pallets capacity	5	7

panel thickness: 20 mm. flatbed thickness: 3 mm. SW: single wheels. TW: twin wheels.

double cab dropside dimensions (mm)

	L3 SW
transmission mode	front-wheel drive
effective length	3,170
effective width	2,040
side panel height	400
euro pallets capacity	5

panel thickness: 20 mm. flatbed thickness: 3 mm. SW: single wheels. TW: twin wheels.

05. dimensions

single cab chassis

front-wheel drive

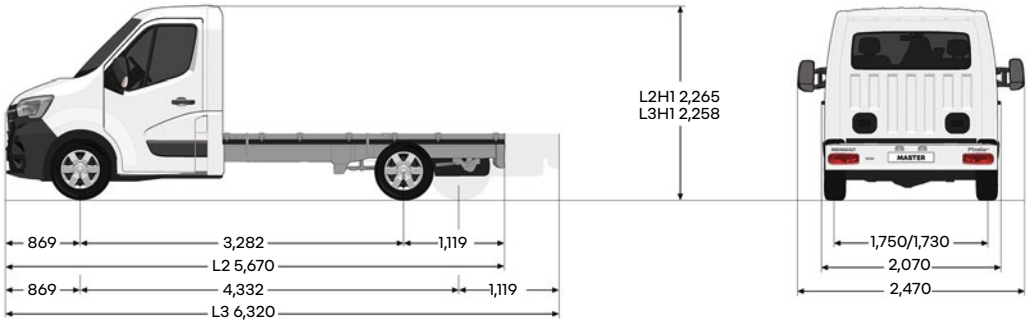

rear-wheel drive

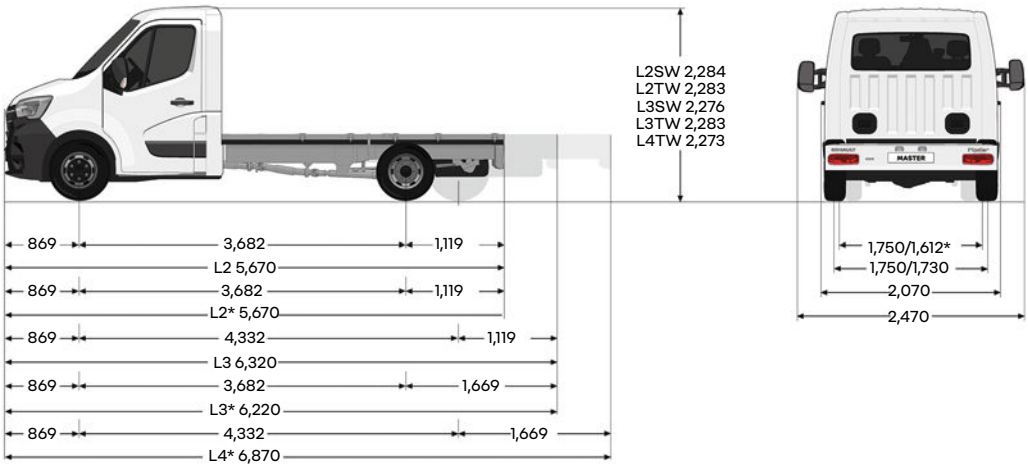

* twin wheels.

single cab chassis weights and loads (kg)

	L2	L3	L2 SW	L3 SW	L2 Long overhang TW
transmission	front-wheel drive		rear-wheel drive		
GVW	3.5 t	3.5 t	3.5 t	3.5 t	3.5 t
min. kerb weight diesel/electric	1,786/1,880	1,807/1,900	1,899	1,950	2,090
max. payload diesel/electric	1,714/1,620	1,693/1,600	1,601	1,550	1,410
max. load on front axle diesel/electric	1,850/tbc				
max. load on rear axle diesel/electric	2,100 /tbc	2,100/tbc	2,300	2,300	2,620
max. towing weight braked/unbraked/electric	2,500/750 /0	2,500/750/0	2,500/750/0	2,500/750	3,000/750
turning circle, kerb to kerb	13.6	15.7	13.6	13.6	13.6
turning circle, wall to wall	14.1	16.2	14.1	14.1	14.1

SW: single wheels. TW: twin wheels.

single cab chassis dimensions (mm)

	L2	L3	L2 SW	L2 TW	L3 SW
transmission	front-wheel drive		rear-wheel drive		
max. body length	5,670	6,320	5,670	5,670	6,320
effective body length (min./max.)	3,184/3,466	3,834/4,840	3,184/4,295	3,184/4,276	3,834/4,926
side member sill height	735/740	736/741	771/774	784/787	771/775
width with extended door mirrors	2,654			2,654	
maximum effective body width (with standard/extended repeater)	2,170/2,350			2,170/2,350	
minimum ground clearance	166			166	

(1) the kerb weight is the weight of the vehicle without the driver and with the fuel tank filled to 90%. This weight is given for the basic version and may vary according to the equipment and engine (by up to 330 kg). (2) the payload is the difference between the maximum Gross Vehicle Weight Rating (GVWR) and the kerb weight. SW: single wheels. TW: twin wheels.

05. dimensions

double cab chassis

front-wheel drive

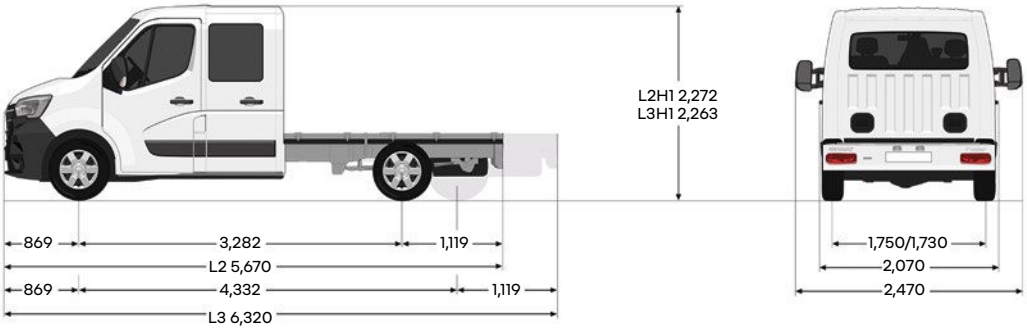

rear-wheel drive

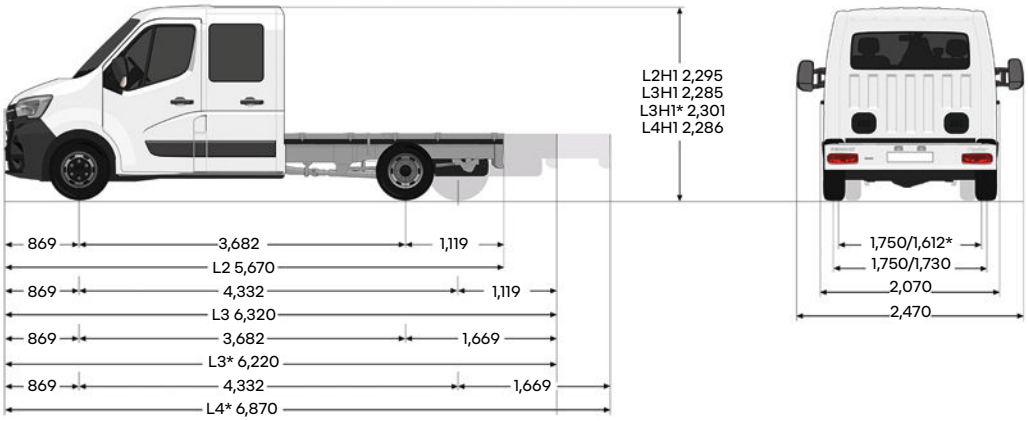

* twin wheels.

double cab chassis weights and loads (kg)

	L2	L3	L3 TW	L3 TW long overhang
transmission type	front-wheel drive		rear-wheel drive	
GVW	3.5 t	3.5 t	3.5 t	3.5 t
min. kerb weight[1]	1,971	1,979	2,245	2,294
max. payload[2]	1,529	1,521	1,255	1,206
max. load on front axle	1,850			
max. load on rear axle	2,100	2,100	2,620	2,620
max. towing weight braked/unbraked	2,500/750	2,500/750	3,000/750	3,000/750
turning circle between kerbs (m)	13.6	15.7	13.6	15.7
turning circle, wall to wall (m)	14.1	16.2	14.1	16.2

double cab chassis dimensions (mm)

	L2	L3	L3 TW	L3 TW long overhang
transmission type	front-wheel drive		rear-wheel drive	
max. body length	5,670	6,320	6,220	6,870
effective body length (min./max.)	2,434/2,516	3,084/4,044	2,985/3,416	3,635/4,436
side member sill height (min./max.)	727/732	731/736	775/780	778/781
width with extended door mirrors	2,654		2,654	
maximum effective body width (with standard/extended repeater)	2,170/2,350		2,170/2,350	
minimum ground clearance	169	169	167	167

(1) the kerb weight is the weight of the vehicle without the driver and with the fuel tank filled to 90%. This weight is given for the basic version and may vary according to the equipment and engines (by up to 330 kg). (2) the payload is the difference between the maximum Gross Vehicle Weight Rating (GVWR) and the kerb weight. SW: single wheels. TW: twin wheels.

05. dimensions

platform cab

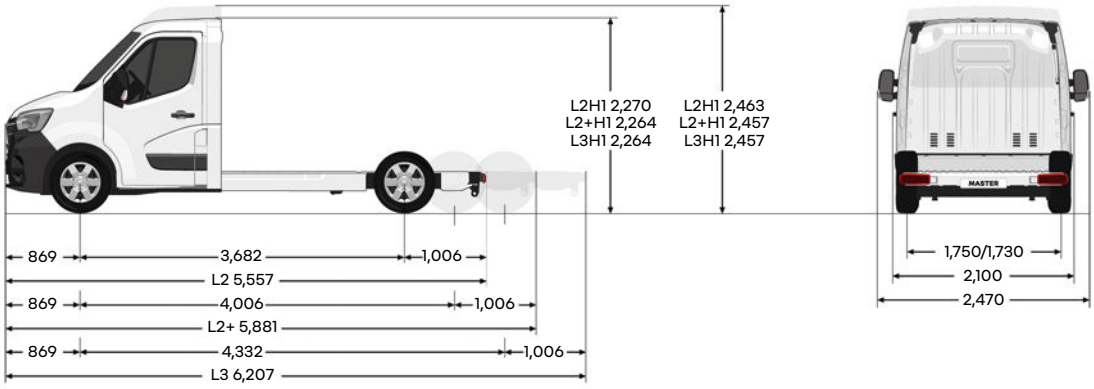

platform cab weights and loads (kg)

	L2H1	E-Tech electric L3H1
transmission type	front-wheel drive	
GVW	3.5 t	3.1 t / 3.5 t
min. kerb weight[1]	1,717	1,795 / 1,780
max. payload[2]	1,783	1,305 / 1,720
max. load on front axle	1,850	1,700 / tbc
max. load on rear axle	2,100	1,900 / tbc
max. trailer weight (braked/unbraked)	2,500/750	0 / 0
turning circle between kerbs (m)	13.6	15.7
turning circle, wall to wall (m)	14.1	16.2

platform cab dimensions (mm)

	L2H1	L3H1
max. body length	5,557	6,207
effective body length (min./max.)	3,091/3,313	3,741/4,583
max. effective body width (with standard/extended side indicators)	2,170/2,350	
width with extended door mirrors	2,654	
floor sill height (min./max.)	581/585	579/583
minimum ground clearance	166	

(1) the kerb weight is the weight of the vehicle without the driver and with the fuel tank filled to 90%. This weight is given for the basic version and may vary according to the equipment and engine (by up to 330 kg). (2) the payload is the difference between the maximum Gross Vehicle Weight Rating (GVWR) and the kerb weight.

05. dimensions

luton low loader

weights and loads luton low loader (kg)

	L3H1 front-wheel drive
GVW	3.5 t
min. kerb weight [1]	2,262
max. payload [2]	1,238
max. load on front axle	1,850
max. load on rear axle	2,100
height of rear door entry (mm)	1,627

dimensions luton low loader (mm)

	L3H1
maximum body length	6,700
maximum effective body width (without door mirrors)	2,070
width with door mirrors	2,470
interior height	2,200
overall height (unladen)	2,840
cargo area length	4,150
maximum loading area width	2,036

(1) the kerb weight is the weight of the vehicle without the driver and with the fuel tank filled to 90%. This weight is given for the basic version and may vary according to the equipment and engine (by up to 330 kg).
(2) the payload is calculated as the difference between the Gross Vehicle Weight (GVW) and the kerb weight.

Every precaution has been taken to ensure that the contents of these technical specifications were accurate and up-to-date at the time of release. This document was created using pre-production models and prototypes. In line with its policy of continuous product improvement, Renault reserves the right to modify the specifications, vehicles and accessories described and featured at any time. Any such modifications are communicated to Renault dealers as quickly as possible. Depending on the country of sale, versions may differ and some equipment may be unavailable (standard, optional or accessories). Please contact your nearest dealer for the latest information. For reasons to do with the medium, the colours featured in this document may differ slightly from those of the actual paintwork or interior trim. All rights reserved. Reproduction in any format and by any means of all or part of these technical specifications is prohibited without prior written authorisation from Renault.

Publicis – photo credits: T. Motta, © Renault Marketing 3D-Commerce – August 2023.