CITROEN VAN SALES

DISCOUNT VAN SALES

PURE VANS

Telephone - 01633-212944
Email - sales@purevans.com

www.purevans.com

Commercial Vehicles

The Transporter

Introducing the Transporter. A vehicle like no other.

When we designed our first compact van some 65 years ago, Volkswagen Commercial Vehicles succeeded in capturing both the imagination and needs of professionals. Since then, each generation of Transporter has added to the legacy. The current sixth-generation Transporter meets expectations with a stylish and contemporary exterior that's designed to make a statement and an interior that's packed full of innovations and modern-day technology to assist your working day. It's this constant evolution that sets the Transporter apart as a technical trailblazer.

Model shown is Transporter panel van.

Contents.

Working with you >

Design >

Interior >

4MOTION >

Rear door & load space solutions >

Trims >

Chassis cabs >

Mobile online services >

Technical information >

Assistance systems >

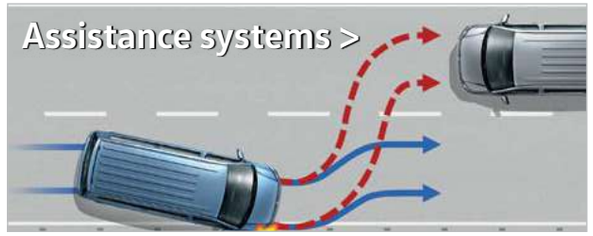

Wheels >

Offers & finance >

Audio & communications >

Build your own >

Paint, trim & upholstery >

Engines & gearboxes >

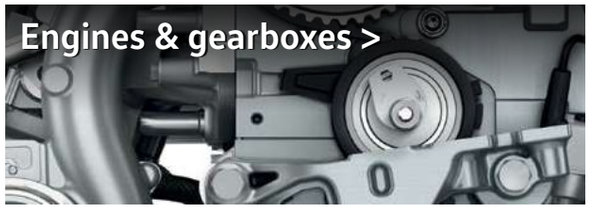

Transporter panel van >

Transporter kombi >

Choose your van >

Service & warranties >

Volkswagen Commercial Vehicles' Van Centres.

Working with you.

It's more than a van to you.
You're more than a customer to us.
We know that when you choose Volkswagen Commercial Vehicles, you're looking for more than just four walls on four wheels. You want a van that looks after itself while you take care of business. A vehicle that makes a statement, as well as a delivery. An investment for the future that makes a difference today.

To us, you're a partner.
By being there to get to know how you work and what you need, we can offer you more – supporting your plans year after year. It means a partnership that lasts as long as your ownership, with a vehicle and a team that's with you for the journey.

Our dedicated network of Van Centres.
Over **70 Van Centres** and **24 Authorised Repairers** means you're only around 45 minutes on average from our door.

Everything for the job...
...and the journey.

The right van.
We're commercial vehicle experts and finding the right van for your business is what makes us tick. We'll guide you through the range, take you on a test drive and cover all the options.

The right accessories.
From mudflaps to sat navs, plylining to roof racks, we'll work with you to create the perfect van – keeping everything 100% Volkswagen to aid high residuals.

The right finance.
Every business is different, so we stay flexible, with a range of finance packages to choose from. Depending on your preference, we'll go through the options to find the one that suits you best.

The right support.
Nothing matters more than keeping you mobile, so our servicing options are built around you. You'll also enjoy three-years' free Roadside Assistance with your new van.

The right service.
We understand it's the little things that make the difference, so we set high standards. We'll call you when we say, keep you informed on delivery dates and support you long after purchase.

And there's more...
We offer a lot more than you might think. From **cost-effective van rental** or an **air conditioning recharge**, to a wide selection of premium and budget **replacement tyres**, if we're not able to help, we'll try and point you in the right direction!

For more information on accessories, finance, service, support and warranties, please refer to the Service and warranties section.

Model shown is Transporter Kombi.

Professional from every angle.

Design.

The Transporter succeeds in catching the eye. With its assured styling and defined contours giving the design a striking look, the Transporter makes a real statement. While the front delivers a bold stance with purposeful headlights and bumper, the rear features elegantly sculptured rear light clusters. Additional highlights include a chrome strip on the radiator grille, stylish side indicators and a range of attractive alloy wheels.

17" Devonport alloy wheels – from our range of stylish alloy wheels.

Optional low energy LED rear light clusters.

Optional low energy LED headlights.

Style, comfort and quality.

Interior.

Designed to impress, the Transporter is packed with features that benefit comfort, convenience and offer assistance while you work. Step inside and you'll find a stylish dashboard with plenty of storage solutions and a quality finish. Everything within the cab has been carefully thought through – from ergonomic seating, to controls and functions that are arranged to be within easy reach.

Combining the use of robust materials and meticulous production methods, the Transporter's interior is designed to stand the test of time. Add to this a broad selection of radio and infotainment systems featuring up-to-the-minute technology – including standard DAB+ radio and Bluetooth®, not to mention the latest advances in safety, and you'll discover the Transporter is a comfortable and enjoyable place to spend your working day.

Radio and infotainment.

Optional Composition Media DAB+ radio system.

Radio and navigation.
The latest-generation devices are available, including the standard Composition Colour touch-screen DAB+ radio system, optional Composition Media DAB+ radio system, as well as the optional Discover Media navigation system.

Voice control. [1]
Available as an option, the voice control system allows you to operate the telephone, navigation and audio functions without taking your hands off the steering wheel.

App-Connect. [2]
Available as an option with the Composition Media DAB+ radio system or Discover Media navigation system. App-Connect allows you to operate certain apps by 'mirroring' the screen of your smartphone on the radio system's colour touch-screen display. Standard on the new Transporter Edition model.

Connectivity.
Available as an option with the Composition Media DAB+ radio system or Discover Media navigation system. External media devices, such as MP3 players, can be connected via an additional USB port. Furthermore, the standard mobile phone interface offers a Bluetooth® hands-free speaking system.

1 The 'Voice' control button on the optional Composition Media DAB+ radio system or Discover Media navigation system is only enabled when ordered in conjunction with the optional Voice control system.
2 The 'App' control button on the optional Discover Media navigation system is only enabled when ordered in conjunction with the optional App-Connect system.

Your safety is our priority.

Safety systems.

Your safety is vital, so we ensure that a long list of safety and security features are built into every vehicle we produce. Since we first introduced structural safety features on commercial vehicles over 35 years ago, Volkswagen has maintained a policy of continuous safety development. Every Volkswagen model incorporates a range of both active and passive safety features, to help ensure the safety and security of both you and your load.

With the vehicle's design contributing to safety, occupants are securely enclosed within a rigid safety cell with crumple zones to absorb crash energy, while the chassis and suspension are designed for excellent directional stability and handling. Features such as Anti-lock Braking System (ABS), Electronic Brakeforce Distribution (EBD), Electronic Stabilisation Programme (ESP), driver and passenger front airbags, electric seatbelt tensioners, Automatic Post-Collision Braking System and Front Assist with City Emergency Braking are fitted as standard.

For additional security and protection, an electronic immobiliser and remote central locking with dead locking and internal locking button are standard, while optional features such as anti-theft devices, front and rear parking sensors, LED headlights, 4MOTION all-wheel drive, automatic rain-sensing wipers and front fog lights with integrated cornering lights all offer additional peace-of-mind.

Electronic Stabilisation Programme (ESP).
Designed to prevent the vehicle from swerving in critical driving conditions by controlled and targeted intervention in the brake and engine management. This helps to maximise directional stability.

Anti-lock Braking System (ABS).
Designed to prevent wheels from locking up and assist manoeuvrability of the vehicle under heavy braking.

Traction Control System (TCS).
Aids smooth starts and acceleration by reducing wheel-spin. The system also incorporates the Electronic Differential Lock (EDL) and makes up part of the Electronic Stabilisation Programme (ESP).

Electronic Differential Lock (EDL).
Allows smooth starts on slippery or loose road surfaces. If one wheel starts to spin, EDL is designed to brake the wheel as necessary, directing power to the wheel with greater traction.

Airbags.
Driver and passenger front airbags are standard. They offer occupants improved protection in the event of head-on impacts.

Seatbelt warning.
The seatbelt warning reminds the driver that their seatbelt is not fastened. Audio and visual signals are used to request that the seatbelt is fastened before driving.

Watch video >

Automatic Post-Collision Braking System.
Standard on all Transporter models, it triggers braking after a collision, with the aim of preventing secondary collisions.

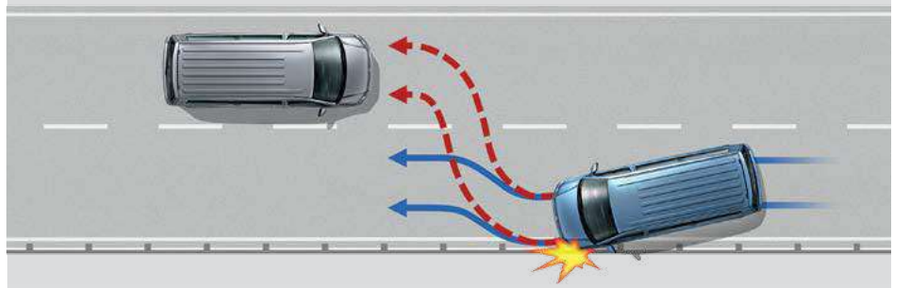

Prepared for any scenario.

Driver assistance systems.

To help ensure every journey ends as stress-free as it begins, the Transporter is equipped with a number of systems – all of which are activated in critical situations as a preventative measure. Add to this a variety of innovative driver assistance systems and you'll discover the Transporter offers high levels of safety and peace-of-mind.

Optional parking sensor display.

Optional rear-view camera display.

Cruise control.
Available as an option, cruise control maintains the selected speed.

Driver Alert System.
Fitted as standard, the Driver Alert System registers deviation from normal steering patterns and uses visual and acoustic warnings to recommend that the driver takes a break.

Brake Assist.
Fitted as standard, the system registers the speed at which the brake pedal is pressed. During emergency braking, it helps ensure full brake pressure is applied more quickly.

Daytime running lights.
Fitted as standard, daytime running lights offer increased visibility. For extra driver convenience, the dipped beam headlights are automatically switched on when you start your vehicle.

Hill Hold Assist.
Fitted as standard, the convenient Hill Hold Assist helps to prevent your vehicle from rolling back when pulling away on an incline. The hold operates for approximately two seconds.

Tyre pressure monitoring.
The optional tyre pressure monitoring display (standard on kombi) activates a warning signal to highlight significant changes in tyre pressure. This lets the driver know that the tyre pressure should be checked as soon as possible.

An intelligent driving experience.

Assistance when you need it.

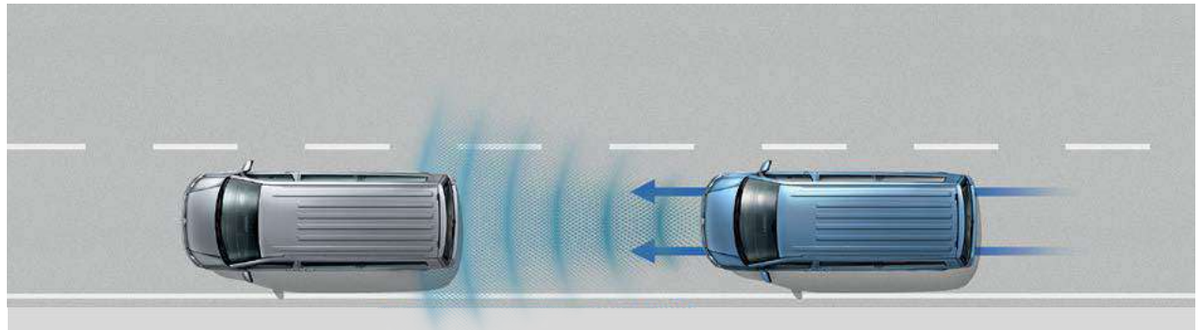

Front Assist with City Emergency Braking System.
The standard Front Assist area monitoring system with City Emergency Braking System detects critical distances, warns of hazardous situations and when necessary, triggers emergency braking.

Adaptive Cruise Control (ACC).
Available as an option, Adaptive Cruise Control (ACC) uses a front radar to measure the distance (up to 120m) and speed relative to vehicles driving ahead. It automatically regulates the pre-set distance.

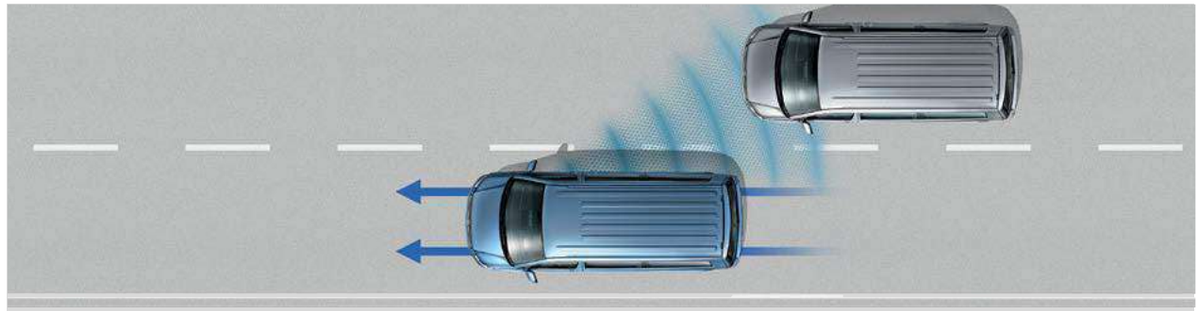

Lane Change Assist – Side Scan.
Available as an option on short wheelbase models only, Side Scan displays a warning signal on the exterior mirror as soon as one of its sensors detects a vehicle in a blind spot during a lane change.

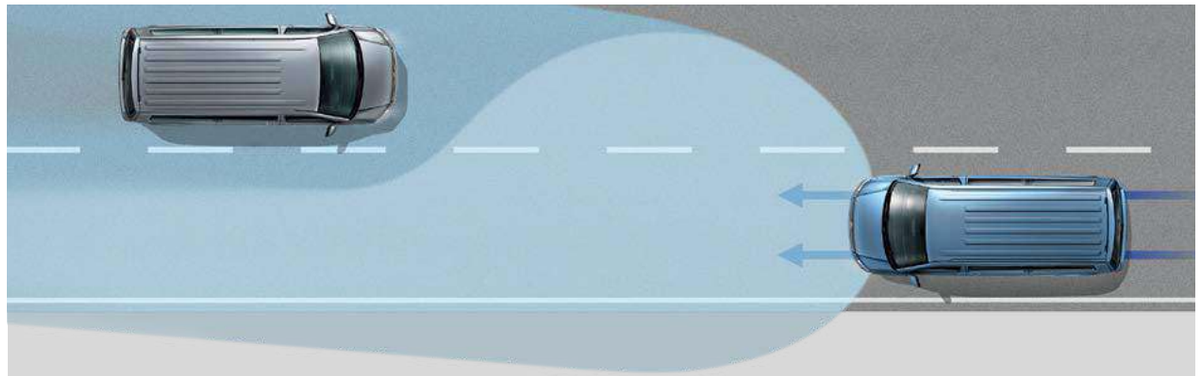

High Beam Assist.
Available as an option, High Beam Assist automatically dips the headlights and prevents dazzle for oncoming vehicles, or vehicles travelling ahead. At night time at speeds of above 37mph, the system automatically switches the headlights to high-beam.

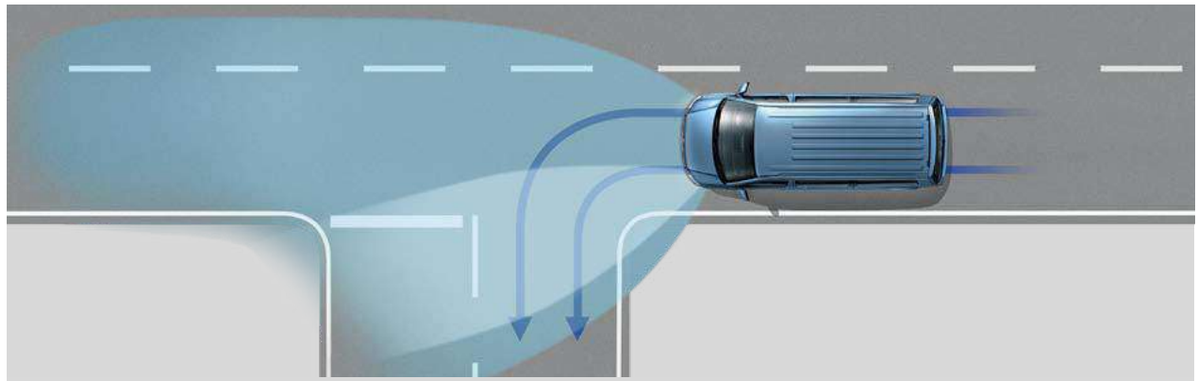

Fog lights with integrated cornering lights.
Available as an option, these help to illuminate curves and bends in the road ahead. This aids the driver in spotting any obstacles where the vehicle is turning.

Powerful. Economical. Advanced.

Diesel and petrol engines with the Euro 6 emissions standard.

The Transporter offers a generation of engines featuring the Euro 6 emissions standard and plenty of usable torque for shifting heavy loads. All Transporters include efficiency technologies as standard – consisting of low rolling resistance tyres, regenerative braking and Start/Stop. Depending on your engine, you'll receive a 5 or 6-speed manual gearbox as standard, while the 150PS and 204PS engines can be specified with a dual clutch direct shift gearbox (DSG), providing a smooth power-flow when changing gear.

Dual clutch direct shift gearbox (DSG).

Our dual clutch direct shift gearbox (DSG) can be used as a fully automatic gearbox, or as a responsive quick-shift manual. The innovative dual clutch system facilitates an instant gear change, whilst helping to maintain swift and smooth progress.

Euro 6 is achieved by applying the following technologies.

Diesel Selective Catalytic Reduction.
Our diesel SCR system uses AdBlue® urea solution to convert nitrogen oxide into nitrogen and water. With this kind of emission control system for diesel engines, the filler neck for the AdBlue® tank is located below the filler cap for the fuel tank. The AdBlue® consumption figures depend on individual driving style, the system's operating temperature and the ambient temperature that the vehicle is operated in. The vehicle is fitted with a separate tank for AdBlue® which holds approximately 13 litres.

Diesel Exhaust Gas Recirculation (EGR).
In our diesel engines, exhaust gas recirculation is a technique that is used to reduce nitrogen oxide (NOx) emissions. EGR works by recirculating a percentage of the engine's exhaust gas back to the engine cylinders.

Diesel Particulate Filter (DPF).
The DPF captures soot particles in the exhaust gas. Periodically, the soot particles are automatically burnt under high temperatures to regenerate the filter and maintain exhaust gas emissions.

TDI Diesel

2.0 litre TDI 84PS (62kW)
Combined cycle fuel consumption: 47.1mpg
CO_2 emissions: 156g/km
Maximum torque: 220Nm

2.0 litre TDI 102PS (75kW)
Combined cycle fuel consumption: 44.1-51.4mpg
CO_2 emissions: 167-145g/km
Maximum torque: 250Nm

2.0 litre TDI 150PS (110kW)
Combined cycle fuel consumption: 40.4-47.9mpg
CO_2 emissions: 184-155g/km
Maximum torque: 340Nm

2.0 litre BiTDI 204PS (150kW)
Combined cycle fuel consumption: 40.4-45.6mpg
CO_2 emissions: 183-161g/km
Maximum torque: 450Nm

TSI Petrol

2.0 litre TSI 150PS (110kW)
Combined cycle fuel consumption: 29.7-31.0mpg
CO_2 emissions: 216-208g/km
Maximum torque: 280Nm

2.0 litre TSI 204PS (150kW)
Combined cycle fuel consumption: 29.7-31.4mpg
CO_2 emissions: 217-206g/km
Maximum torque: 350Nm

Figures are based on panel van range. Standard EU test figures for comparative purposes and may not reflect real driving results. For full mpg and CO_2 data, please refer to the Technical information section.

Get to grips with hard work.

4MOTION all-wheel drive.

The Transporter offers a number of innovative features to help retain traction, optimum handling and outstanding steering response when encountering poor surface conditions.

4MOTION all-wheel drive.
The advantage of the Haldex clutch for the 4MOTION all-wheel drive is an improvement to vehicle handling and dynamics.

4MOTION all-wheel drive with DSG.
The Transporter is the only vehicle in its class that's available with 4MOTION all-wheel drive and a 7-speed, dual clutch direct shift gearbox (DSG). Available as an option, this combination enables smooth driving on rugged terrain, thanks to its fully automatic gear changes.

Mechanical differential lock.
The optional mechanical differential lock is available for the rear axle together with optional 4MOTION all-wheel drive. This helps to maintain traction when you encounter adverse conditions, such as rain, snow, mud or gravel.

Helping to make work easier.

Rear door solutions.

With two wheelbases and three roof heights, there's plenty of choice when it comes to space and access. What's more, with its legendary build-quality, together with robust hinges, handles and locks, all Transporters are designed to take the rigours of the working day in their stride. We also know that flexibility is important for any business, so every Transporter is available with a choice of either a large tailgate or versatile rear wing doors – with the option to specify 250° opening angle hinges on long wheelbase models. Both are available glazed or in solid metal for added security. With a low load bed, combined with a generous rear opening width of 1,473mm and maximum load height of 1,940mm for high roof models, you'll discover that whichever solution you choose, the Transporter is designed to make load access easy and convenient.

Rear wing doors with heated windows. Optional on panel van and kombi.

Tailgate with window. Standard on kombi, no cost option on panel van.

Tailgate without window. No cost option for panel van and kombi.

Optional high roof featuring high rear wing doors with windows.

Optional high roof featuring high rear wing doors without windows.

Rear wing doors with optional 250° opening angle for long wheelbase models.

Image shown features rear wing doors without windows which are standard on panel van, while optional on kombi. Image also shows 250° opening angle hinges which are optional on long wheelbase models.

The space to tackle large and difficult jobs.

Load space solutions.

Versatile and clever load space solutions.

All Transporter models provide a spacious load compartment with volumes ranging from 5.8m³ for the short wheelbase low roof, to 9.3m³ for the long wheelbase high roof. If you require the flexibility to carry both cargo and crew, then the versatile kombi is the answer. With its rear seats removed, the kombi offers near identical levels of usable space. While the standard specification includes multiple load-lashing rings, sturdy painted load floors on panel vans and rubber floor coverings on the kombi. It's the Transporter's range of optional bulkheads, robust load floor coverings, storage solutions, ventilation and electrical upgrades – not to mention its range of Volkswagen accessory 'Add Ons', that help it to tackle virtually any job.

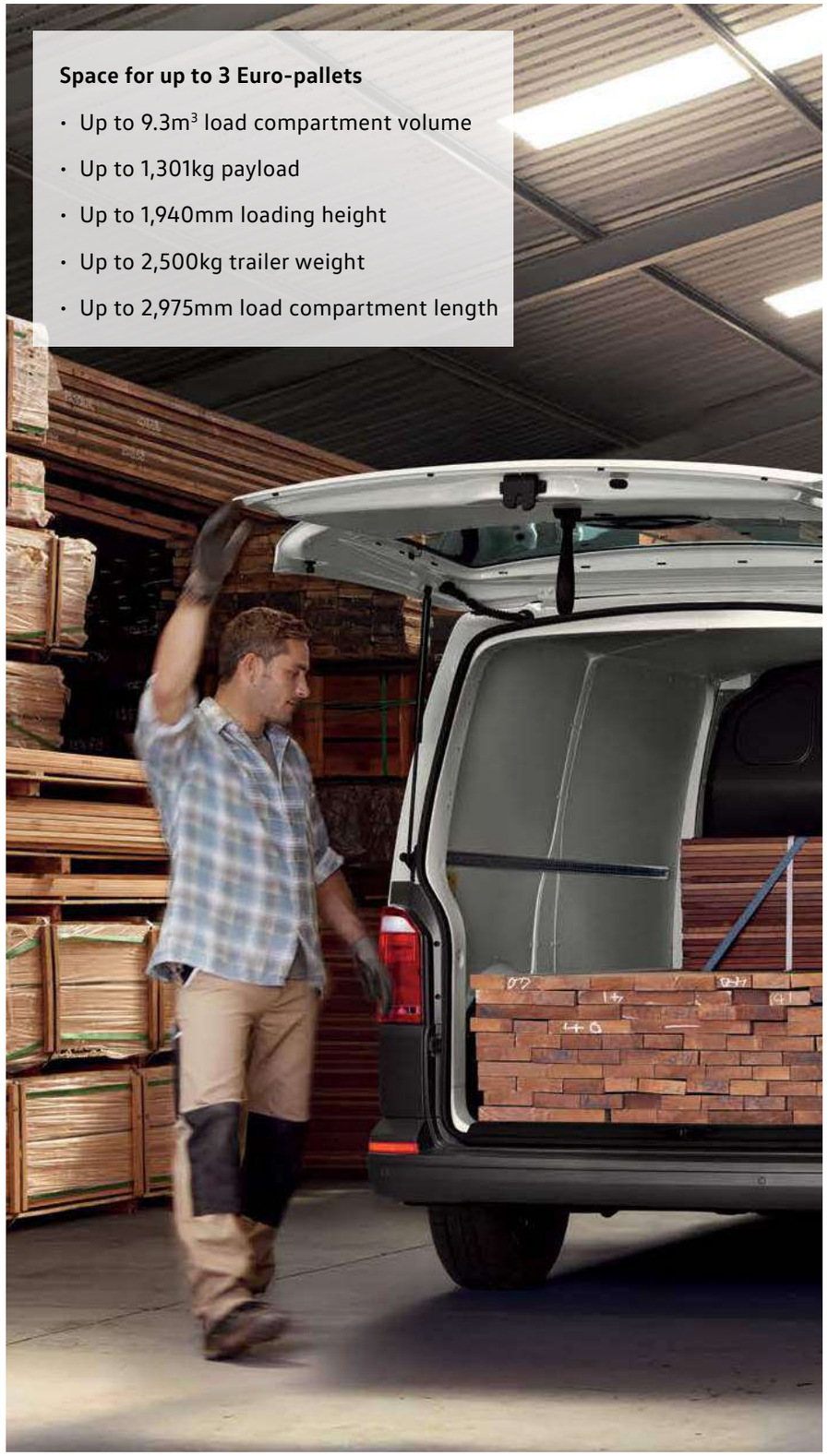

Space for up to 3 Euro-pallets

- Up to 9.3m³ load compartment volume
- Up to 1,301kg payload
- Up to 1,940mm loading height
- Up to 2,500kg trailer weight
- Up to 2,975mm load compartment length

01

02

03

01 Optional rubber load floor covering (standard on kombi) with load-lashing rings.

02 Optional full-height bulkhead with window.

03 Optional load compartment heating system.

So which model do you need?

Choose your van.

Your van.
You probably already have an idea about what you need from your ideal van and what you'll need to carry. Likewise, you're sure to have an idea about what's the heaviest, tallest, widest or longest load you'll need to get into your vehicle. If you're a Fleet Manager, then you'll probably need a variety of options and more than one vehicle. Bearing these factors in mind, the information featured on these pages is designed to help as a quick guide to which vehicle may be the closest match to your own specific requirements.

Your trimline.
For added choice, there's a variety of trimlines available, each delivering its own distinct feel. From the robust Startline to the luxurious Highline, you're sure to find a vehicle and trimline combination that not only works hard, but also creates the right impression.

Your choice.
And remember, that's not all. Every Transporter is available with a wide range of options and accessories – all designed to further help tailor your vehicle to your own particular needs. So which model do you need?

How to select your van:

1. Think about the **maximum length and height** of your load. This will help you choose a wheelbase and roof height. If you need to carry more than two passengers, you'll need to consider choosing a Transporter kombi.
2. On the right hand page you'll see **payload**[1] ranges. Think about the heaviest load you need to carry. This will help you choose what's suitable (for instance a T30).
3. From the choice available, decide which **trimline** is right for you.
4. Take a look at the separate Transporter price list to discover which **engines and options** are available for your chosen van.

Short wheelbase low roof.

Load length[2]: 2,572mm
Load width: 1,700mm
Load height: 1,410mm

5.8m³
load area volume.

Long wheelbase low roof.

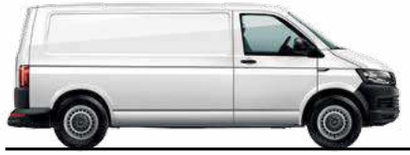

Load length[2]: 2,975mm
Load width: 1,700mm
Load height: 1,410mm

6.7m³
load area volume.

Long wheelbase high roof.

Load length[2]: 2,975mm
Load width: 1,700mm
Load height: 1,940mm

9.3m³
load area volume.

1 For further information about weights, please refer to the Technical information section.

Please note: The kombi's load dimensions vary slightly from the above panel van figures.
For further information about dimensions, please refer to the Technical information section.

2 Please note: load length is based on vehicles without a bulkhead.

Exterior dimensions.

Panel van.		Startline	Trendline	Highline	Payload
Short wheelbase low roof	T26 (2,600kg)	●	–	–	715kg
	T28 (2,800kg)	●	●	●	768kg – 917kg
	T30 (3,000kg)	●	●	●	968kg – 1,117kg
	T32 (3,200kg)	●	●	●	1,043kg – 1,271kg
Long wheelbase low roof	T28 (2,800kg)	●	●	●	745kg – 860kg
	T30 (3,000kg)	●	●	●	912kg – 1,060kg
	T32 (3,200kg)	●	●	●	987kg – 1,244kg
Long wheelbase high roof	T28 (2,800kg)	●	●	●	745kg – 860kg
	T30 (3,000kg)	●	●	●	912kg – 1,060kg
	T32 (3,200kg)	●	●	●	987kg – 1,244kg

Kombi.					
Short wheelbase low roof	T30 (3,000kg)	●	●	●	861kg – 1,052kg
	T32 (3,200kg)	●	●	●	966kg – 1,174kg
Long wheelbase low roof	T32 (3,200kg)	●	●	●	903kg – 1,141kg
Long wheelbase high roof	T32 (3,200kg)	●	●	●	903kg – 1,141kg

Delivering expectations.

The Transporter panel van.

Designed to work, the Transporter panel van is available with a choice of three roof heights, two wheelbases and six engines. This level of choice and adaptability means you can tailor your van more precisely to the needs of your business. Standard cab seating consists of a single driver's seat with height, lumbar, reach and rake adjustment and a dual passenger seat. There's also the option of a single passenger seat. Access to the cargo area is through a single near-side sliding door and twin rear wing doors without windows, while a second, off-side, sliding door can also be specified. To restrain your cargo, the floor area features either six or eight load-lashing rings (depending on you choice of wheelbase), ensuring your load is secured as safely as possible.

Long wheelbase with optional single passenger seat.

Perfect for cargo and crew alike.

The Transporter kombi.

Versatility is at the core of every Transporter kombi. With an identical choice of roof heights, wheelbases and engines to the panel van, the kombi features a single front passenger seat and adds to the panel van by offering removable rear seating for a further three passengers – all fitted with 3-point seatbelts and height-adjustable head restraints. Access to the rear passenger area is through a single near-side glazed sliding door, while at the rear there's a glazed tailgate with heated window and wash-wipe. Featuring a robust rubber floor covering throughout the cab and cargo area, as well as four load-lashing rings in the cargo area, the kombi's flexible interior can be transformed in seconds from a comfortable five or six-seater, into a spacious delivery van. It's the ideal choice when you need to combine load carrying with the ability to safely transport a crew of up to six (including the driver).

The Transporter kombi long wheelbase can seat up to five or six people, with ample storage space for luggage too.

Choose your trimline. Startline equipment.

Once you've found your ideal van – or indeed vans if you're a fleet customer, the next step is to choose your perfect trimline. Both the Transporter panel van and kombi have a choice of five levels **Startline, Trendline, Highline, Edition and Sportline** – each with their own particular strengths and all designed to create the right impression for your business.

Audio and communications

- Bluetooth® phone connectivity with trip computer and multi-function display plus.
- Composition Colour DAB+ radio system with 5" touch-screen, single MP3 compatible CD drive, SD card slot, AUX-IN socket and four speakers.
- USB connection in glove compartment or storage shelf.

Cab area.

- Austin cloth upholstery.
- Digital clock.
- Dimmable dashboard illumination.
- Door mirrors – electrically heated and adjustable.
- Driver's seat with height, lumbar, reach and rake adjustment.
- Dual passenger seat.
- Electric front windows.
- Gear shift indicator.
- Grab handle on 'A' pillar, on driver's and front passenger's side.
- Interior light.
- Lockable glove compartment.
- Manually controlled heating system with dust and pollen filter and air recirculation.
- Rev counter.
- Rubber floor covering.
- Single passenger seat with reach and rake adjustment (kombi).
- 12V sockets x 2.

Cargo area.

- Half-height load side lining in hardboard (panel van).
- Full-height load side lining in hardboard (kombi).
- Interior entry step.
- Interior roof trim in painted hardboard (low roof only).
- Load-lashing rings (six for short wheelbase and eight for long wheelbase).
- Rear door interior release lever.
- Rubber floor covering (kombi).
- Manual near-side sliding door.
- Sliding windows in near-side sliding door and opposite window (kombi).
- Steel flooring (panel van).
- Three-seat bench in first row (kombi).
- Two door activated interior lights (three with optional high roof).

Exterior.

- Front and rear towing eyes.
- Galvanised steel body.
- Black door mirrors and handles.
- Black front and rear bumpers.
- Heat insulating glass.
- Tailgate with heated window and wash-wipe (kombi).
- Unglazed rear wing doors with 180° door opening (panel van).

Safety and security.

- Anti-lock Braking System (ABS).
- Automatic Post-Collision Braking System.
- Brake Assist.
- Driver Alert System.
- Driver and passenger front airbags (with passenger deactivation).
- Electronic Brakeforce Distribution (EBD).
- Electronic Differential Lock (EDL).
- Electronic Stabilisation Programme (ESP).
- Front Assist with City Emergency Braking System.
- Height-adjustable head restraints.
- Height and rake adjustable steering column.
- Hill Hold Assist.
- Remote central locking with interior locking and two remote folding keys.
- Seatbelt warning when not engaged.
- Thatcham Category 2 approved immobiliser.
- Traction Control System (TCS).
- Tyre pressure monitoring (kombi).

Wheels and tyres.

- 16" steel wheels. 16 x 6.5J with 205/65 R16 low rolling resistance tyres.
- Black wheel centre caps.
- Full size steel spare wheel.
- Tool kit and jack.

Efficiency technology.

- Low rolling resistance tyres.
- Regenerative braking.
- Start/Stop.

Equipment in addition to Startline. Trendline equipment.

The **Trendline** equipment builds upon the strengths of the Startline by offering a wide range of stylish, practical and technological items. By selecting the most popular options available and combining them into one handy pack, the Trendline offers amazing value when compared to ordering each item individually.

Cab area.

Armrests for driver's seat.

Armrests for front passenger seat (kombi).

Comfort pack – including foldable grab handles on 'A' pillars, waste bin for door pockets in cab, twin sun visors with vanity mirrors, two-tone horn, dimmable dashboard illumination and additional noise suppression measures.

Cruise control.

Simora cloth upholstery.

Cargo area.

Full-height steel bulkhead (panel van).

Exterior.

Body-coloured bumpers, door mirrors and handles.

Rear parking sensors.

Wheels and tyres.

Stylish full wheel trims.

01

02

03

01 Full wheel trims. An eye-catching and realistic alloy wheel-effect design.

02 Body-coloured bumpers, door mirrors and handles. Increased elegance for style-conscious businesses.

03 Rear parking sensors. For added safety when reversing.

Unladen weight, payload, fuel consumption and CO_2 emissions may be influenced by trimline, factory options and Van Centre fitted accessories.

Equipment in addition to Trendline. Highline equipment.

The luxurious **Highline** adds to the Trendline's already impressive specification and offers the perfect balance of comfort and style in a hard-working vehicle. Choose a Highline and you'll have a van that's designed to help get your business noticed.

Cab area.

Automatically dimming rear-view mirror with rain sensor.

Automatic driving light control.

Climatic air conditioning.

Heated windscreen.

Leather multi-function steering wheel, gearknob and gaiter.

Exterior.

Automatic headlight activation with daytime running lights, leaving home and manual coming home function.

Front fog lights with cornering lights.

Safety and security.

Thatcham Category 1 approved alarm and immobiliser with tow-away, perimeter and interior cab protection.

Wheels and tyres.

16" Clayton alloy wheels with 205/65 R16 low rolling resistance tyres (T28, T30 102PS and 150PS engines).

17" Devonport alloy wheels with 215/65 R17 low rolling resistance tyres (T32 and/or 204PS engine).

01

02

03

04

01 Climatic air conditioning. Delivers a temperature controlled environment.

02 Leather multi-function steering wheel, gearknob and gaiter. Adds a touch of class to your Transporter's interior.

03 16" Clayton alloy wheels. Standard on T28, T30 102PS and 150PS engines.

04 17" Devonport alloy wheels. Standard on T32 and/or 204PS engine.

Unladen weight, payload, fuel consumption and CO_2 emissions may be influenced by trimline, factory options and Van Centre fitted accessories.

Style as well as practicality.

The Transporter Edition.

Take the practicality of a T30 panel van or the versatility of a T30 kombi and add to that striking exterior styling highlights and an impressive array of standard equipment, and you'll have a van ready for any eventuality. The stunning new **Edition** builds on the Highline's impressive specification and combines it with a striking high-gloss black roof and wing mirrors and unique 'EDITION' decals that accentuate the bodylines. The exterior styling is finished off with 17 or 18 inch alloys depending on which engine you opt for, LED headlights with LED daytime running lights and privacy glass. Assistance is provided by power latching for the passenger side sliding door and Discover Media satellite navigation system, while front and rear parking sensors with rear-view camera make light work of parking or reversing.

Decorative decals may show signs of wear and tear or ageing, in particular when subjected to direct sunlight, after a period of 1 to 3 years or even within 1 year in very hot climates. If the decorative decals remain on the vehicle for an extended period of time, visual differences may appear between the area protected by the decal and the paint finish that is not covered by decal.

Equipment in addition to Highline. Transporter Edition equipment.

Audio and communications.

Discover Media satellite navigation system including DAB+ radio, 6.33" touch-screen, AUX-IN, SD card slot, USB port, Bluetooth® phone connectivity, MP3 compatible CD player and four speakers.

App-Connect.

Driver assistance.

LED headlights with LED daytime running lights.

Front and rear parking sensors with rear-view camera.

Headlight washer system with heated front washer nozzles and washer fluid level indicator.

Exterior.

Dark tinted LED rear combination lights.

High-gloss black roof.

High-gloss black wing mirrors.

Tailgate with heated window and wash-wipe (kombi).

Tailgate without window (panel van).

Unique 'EDITION' decals.

Body and chassis.

Power latching for passenger side sliding door.

Power folding wing mirrors.

Wheels and tyres.

17" x 7J Cascavel alloy wheels with black diamond-turned surface and 235/55 R17 103H low rolling resistance tyres (150PS engine).

18" x 8J Springfield alloy wheels with black surface and 255/45 R18 103H low rolling resistance tyres (204PS engine).

Tyre mobility kit in lieu of spare wheel; 12V compressor and tyre sealant.

01

02

03

03

04

05

01 Discover Media satellite navigation system. Includes DAB+ radio, App-Connect and a 6.33" colour touch-screen display for radio and navigation functions.

02 Unique 'EDITION' decals feature on the side and rear panels.

03 High-gloss black roof and wing mirrors enhance the Edition's dynamic look from top to bottom.

04 17" Cascavel alloy wheels with black diamond-turned surface (150PS engine).

05 18" Springfield alloy wheels with black surface (204PS engine).

Unladen weight, payload, fuel consumption and CO_2 emissions may be influenced by trimline, factory options and Van Centre fitted accessories.

A sporting icon.

The Transporter Sportline.

The sixth generation Transporter Sportline has improved with age and is fast becoming an icon in the world of commercial vehicles. Available as a short or long wheelbase panel van or versatile kombi, the powerful 204PS BiTDI Sportline guarantees swift progress with the 7-speed dual clutch direct shift gearbox (DSG). And when it comes to hard work, the Sportline delivers with a generous 3.2 tonne gross vehicle weight and a sporty and luxurious interior that's designed to ease you through your working day and make every journey a pleasure. In fact, with the kind of performance and specification levels to grace any top-of-the-range vehicle, the iconic Transporter Sportline offers a commercial vehicle experience that's second-to-none.

Model shown features optional LED headlights.

Equipment in addition to Highline. Transporter Sportline equipment.

The top-of-the-range **Sportline** features all of the qualities found across the Transporter range, but with an enhanced specification that's as comprehensive as it is sporty. It's the ultimate commercial vehicle for businesses and individuals who want to make a statement.

Audio and communications.

Discover Media satellite navigation system including DAB+ radio, 6.33" touch-screen, AUX-IN, SD card slot, USB port, Bluetooth® phone connectivity, MP3 compatible CD player and four speakers.

Cab area.

Fitted floor mats with Sportline logo.

Leather quilted seats – two-tone Black and Red with embossed Sportline logo.

No bulkhead.

Single driver's seat and dual front passenger bench.

Three-seat passenger bench in second row (kombi).

Wheels and tyres.

18" Sportline alloy wheels low rolling resistance tyres (available in a choice of finishes).

Exterior.

Carbon fibre door mirror covers.

Front bumper spoiler.

Lowered suspension.

Side bars with puddle lights.

Sportline badging.

Rear roof spoiler.

Tailgate with heated window and wash-wipe (kombi).

Unglazed rear wing doors with 180° door opening (panel van).

Unladen weight, payload, fuel consumption and CO_2 emissions may be influenced by trimline, factory options and Van Centre fitted accessories.

01

02

03

04

05

01 Discover Media satellite navigation system. Includes DAB+ radio and 6.33" touch-screen for radio and navigation functions.

02 Door mirrors. Carbon fibre covers.

03 Rear roof spoiler. Delivers the perfect sporty finishing touch.

04 Front bumper spoiler. Includes front fog lights and cornering lighting.

05 18" Sportline alloy wheels.

Build on a firm foundation.

The Transporter chassis cabs.

Transporter single and double cabs form a firm foundation for a wide range of specialist applications and conversions. At the heart of each model sits a strong ladder frame chassis which enables virtually any kind of body to be mounted. You'll also find a large selection of task-specific factory options, which help you specify your chassis cab to your own particular needs. If you simply require a straight-forward pickup, then our optional factory-fitted dropside body (T30 only) is more than up to the task. And when it comes to carrying your crew, both chassis cabs are no less able, with the single cab seating up to three (including the driver) and the double cab accommodating a crew of up to six with four doors as standard.

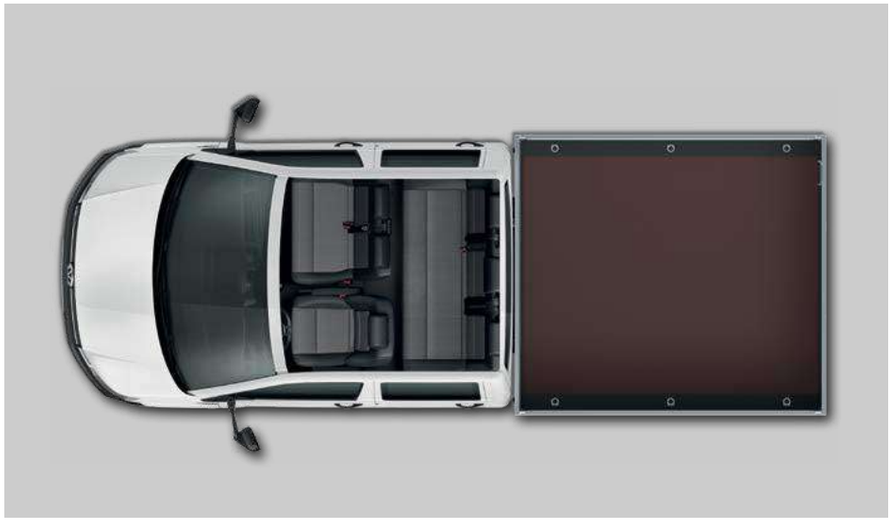

The Transporter long wheelbase chassis double cab can seat up to six people, with ample storage space for luggage too.

Equipment.
Transporter chassis cabs.

If you just need a hard-working pickup rather than a specialist body or conversion, then our sturdy factory-fitted aluminium dropside body is a great choice. Available as an option for T30, access for loads is made as simple as possible with easy-to-operate quick-release fasteners and a convenient entry step on the rear tailboard. Lashing rings can be utilised to hold your cargo in position.

Audio and communications

- Bluetooth® phone connectivity with trip computer and multi-function display plus.
- Composition Colour DAB+ radio system with 5" touch-screen, single MP3 compatible CD drive, SD card slot, AUX-IN socket and four speakers.
- USB connection in glove compartment or storage shelf.

Cab area.

- Austin cloth upholstery.
- Digital clock.
- Dashboard illumination.
- Door mirrors – electrically heated and adjustable.
- Driver's seat with reach and rake adjustment.
- Dual passenger seat.
- Electric front windows.
- Gear shift indicator.
- Grab handle on 'A' pillar, on driver's and front passenger's side.
- Interior light.
- Lockable glove compartment.
- Manually controlled heating system with dust and pollen filter and air recirculation.
- Rear passenger doors – driver and passenger side (double cab).
- Rev counter.
- Rubber floor covering.
- Three-seat bench on 2nd row (double cab).
- 12V socket.

Optional factory-fitted dropside body.

- Entry step on rear tailboard.
- Lightweight aluminium construction.
- Load-lashing rings (four on double cab, six on single cab).
- Quick-release levers on dropsides.

Exterior.

- Front towing eyes.
- Galvanised full steel body.
- Black door handles.
- Black extra-wide door mirrors.
- Black front bumper.
- Heat insulating glass.

Safety and security.

- Anti-lock Braking System (ABS).
- Automatic Post-Collision Braking System.
- Brake Assist.
- Driver Alert System.
- Driver and passenger front airbags (with passenger deactivation).
- Electronic Brakeforce Distribution (EBD).
- Electronic Differential Lock (EDL).
- Electronic Stabilisation Programme (ESP).
- Front Assist with City Emergency Braking System.
- Height-adjustable head restraints.
- Height and rake adjustable steering column.
- Hill Hold Assist.
- Remote central locking with interior locking, two remote folding keys and one rigid key.
- Seatbelt warning when not engaged.
- Thatcham Category 2 approved immobiliser.
- Traction Control System (TCS).

Wheels and tyres.

- 16" steel wheels. 16 x 6.5J with 205/65 R16 low rolling resistance tyres.
- Black wheel centre caps.
- Full size steel spare wheel.

Efficiency technology.

- Low rolling resistance tyres.
- Regenerative braking.
- Start/Stop.

01 Sturdy ladder frame chassis.
Forms the perfect foundation for a wide range of specialist applications.

02 Entry step on rear tailboard.
Aids access to the rear of the load bed.

03 Load-lashing rings.
Conveniently inset into the load bed when not in use.

04 Composition Colour DAB+ radio system.
With 5" touch-screen.

Paint.

Candy White[1] Solid paint

Pure Grey[2] Solid paint

Cherry Red Solid paint

Grape Yellow[2,3,4] Solid paint

Bright Orange[2] Solid paint

Summer Blue Solid paint

Deep Ocean[2] Solid paint

Reflex Silver[1,4] Metallic paint

Indium Grey[4] Metallic paint

Mojave Beige[4] Metallic paint

Chestnut Brown[4] Metallic paint

Bamboo Garden Green[4]
Metallic paint

Acapulco Blue[4] Metallic paint

Starlight Blue[4] Metallic paint

Oryx White[4,5] Pearl effect paint

Deep Black[1,4] Pearl effect paint

1 Reflex Silver and Candy White with a black painted roof and Deep Black are available on Sportline at extra cost.
2 Pure Grey, Grape Yellow, Bright Orange and Deep Ocean are only available on Startline.
3 Grape Yellow is available on Edition.
4 Available at extra cost.
5 Oryx White is not available on Sportline.

Please note: Not all paint and upholstery combinations can be ordered together and in some instances certain combinations may incur extra cost. Not all paint finishes may be available for every trimline. Please check details and availability with your Volkswagen Van Centre at the time of ordering. Screen representations do not allow exact reproduction of paint, upholstery and trim colours.

Trim & upholstery.

Formulated to help withstand all that work can throw at it, the Transporter's paint, trim and upholstery are designed to stand the test of time. As you'd expect from any Volkswagen, exterior paints offer a smooth and tough finish, while the interior upholstery is made from high-quality materials that are both robust and easy to clean.

Interior trim.

Moonrock Grey

Titanium Black

Seat upholstery.

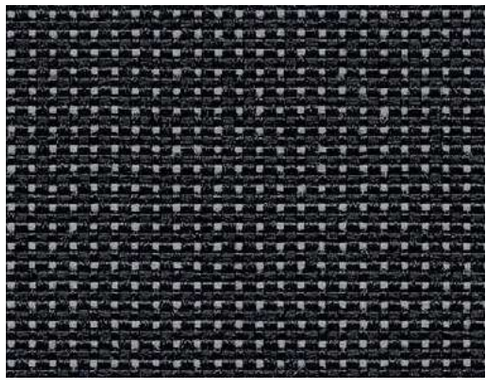

Austin[1]
Titanium Black cloth SL

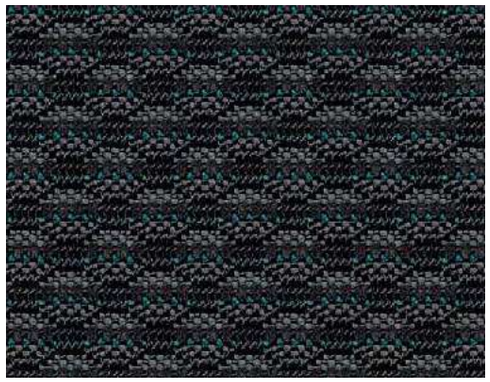

Simora[2]
Titanium Black cloth TL HL E

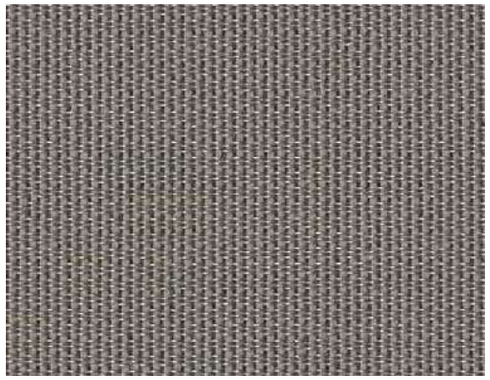

Marathon[2, 3]
Moonrock Robust cloth
SL TL HL E

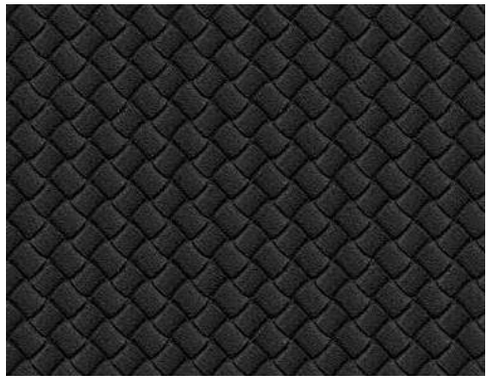

Leatherette[2]
Titanium Black 'Mesh' Leatherette
SL TL HL E

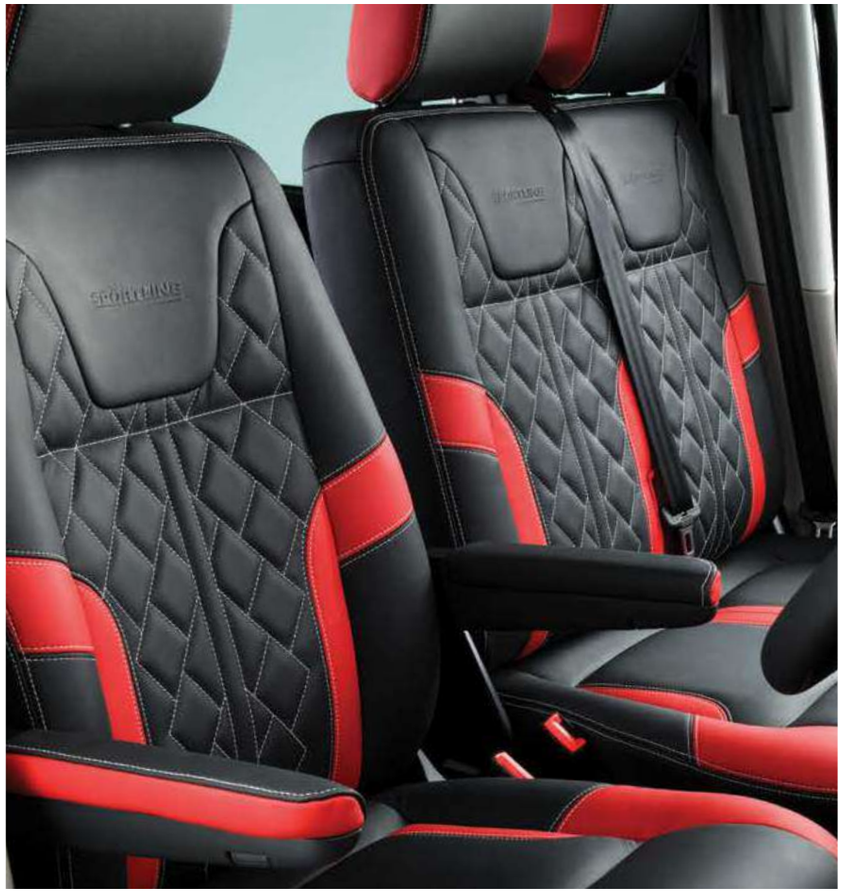

Sportline quilted leather
Two-tone Red and Black
SP

Standard Optional
SL | **Startline** TL | **Trendline** HL | **Highline** E | **Edition** SP | **Sportline**

1 Also available in Moonrock. 2 Available at extra cost. 3 Only available for the cab.
Please note: Not all paint and upholstery combinations can be ordered together and in some instances certain combinations may incur extra cost. Not all paint finishes may be available for every trimline. Please check details and availability with your Volkswagen Van Centre at the time of ordering. Screen representations do not allow exact reproduction of paint colours.

Wheels.

01 16" Steel wheel. 16 x 6.5J with 215/65 R16 or 205/65 R16 tyres. Standard on Startline.

02 16" Full wheel trim. 16 x 6.5J with 215/65 R16 or 205/65 R16 tyres. Standard on Trendline.

03 16" Clayton. 16 x 6.5J alloy wheels with 215/65 R16 or 205/65 R16 tyres. Standard on Highline T28, T30 102PS or 150PS.

04 17" Cascavel. 17 x 7J alloy wheels, black diamond-turned surface with 235/55 R17 103H low rolling resistance tyres. Standard on Edition T30 150PS.

05 17" Devonport. 17 x 7J alloy wheels with 235/55 R17 or 215/65 R17 tyres. Standard on Highline T32 and/or 204PS.

06 18" Springfield. 18 x 8J alloy wheels, black surface with 255/45 R18 103H low rolling resistance tyres. Standard on Edition T30 204PS.

01

02

03

04

05

06

Audio & communications.

01

02

03

04

01 Composition Colour DAB+ radio system.
Fitted as standard, the Composition Colour DAB+ radio system features a 5" TFT touch-screen colour display, USB port, Bluetooth®, SD card slot, AUX-IN interface, MP3 and WMA compatible CD drive, 4 x 20 watt output with four speakers and a dual tuner with PhaseDiversity for optimum radio reception.

02 Composition Media DAB+ radio system.
The optional Composition Media DAB+ radio system features an increased touch-screen size of 6.33" with proximity sensor, USB port, Bluetooth®, SD card slot, AUX-IN interface, MP3 and WMA compatible CD drive, 4 x 20 watt output with four speakers and a dual tuner with PhaseDiversity for optimum radio reception. App-Connect is available as an option for this system.

03 Discover Media satellite navigation system.
The optional Discover Media satellite navigation system builds on the strengths of the Composition Media DAB+ radio system by adding satellite navigation and a second integrated SD card slot compatible for map data. The system includes free updates for the pre-installed European maps through Volkswagen MapCare. App-Connect is available as an option for this system.

04 App-Connect.[1] Available as an option with the Composition Media DAB+ radio system or Discover Media navigation system. App-Connect allows you to operate special apps. The screen of your smartphone can be shown on the radio system's display.

1 The 'App' control button on the optional Discover Media navigation system is only enabled when ordered in conjunction with the optional App-Connect system.

Mobile online services.

Optional App-Connect – Volkswagen apps.[1]

Download special Volkswagen apps to your mobile or tablet, such as 'Shared Audio', 'Drive & Track', 'Call & Remind', 'My Guide' and 'Sound Journey' to make every journey more pleasant and interesting. The apps provide you with information about your driving behaviour, guide you to parking spaces in the vicinity, make detailed suggestions about exciting destinations – all taking into account the weather and traffic data.

Optional Car-Net Guide & Inform.[2]

Use Car-Net Guide & Inform to enhance your vehicle's optional Discover Media navigation system with online-based, up-to-date information services for greater convenience when travelling. For example, utilise real-time traffic information to avoid a sudden traffic jam, or refuel at the cheapest petrol station, or find a free parking space without the need for an infuriating search. Car-Net Guide & Inform helps you to reach your destination quickly and with the least amount of stress.

Online traffic information.
Save time and avoid stress with real-time traffic information, enabling you to avoid traffic jams by dynamically adapting your route.

Petrol stations.[3]
View the petrol stations with the cheapest fuel prices in your immediate vicinity.
Your vehicle's fuel type is automatically identified.

Parking spaces.[3]
Save time and view available parking options, along with prices and opening hours.

Weather.
Stay up-to-date with the latest weather information while on the move.

Online special destination search.
Customised information about local services is sent directly to your touch-screen display.

News.
Subscribe to personalised news categories and use the news feeds to stay up-to-date.

Online destination import.
Conveniently plan your driving destinations from home using the customer portal and retrieve them using the navigation system.

My special destinations.
Use the customer portal to save your preferred destinations while at home and import these into your vehicle's navigation system.

Vehicle status report.
Retrieve the latest service information and error messages from your vehicle.

Car-Net

Car-Net registration in a few easy steps:

1. Create your personal account on the Car-Net website.
2. You will receive a registration code (PIN).
3. Enter your vehicle identification number (VIN).
4. Enter the PIN into your vehicle's navigation system.

1 Available as an option, App-Connect is only available in conjunction with the Composition Media DAB+ radio system or the Discover Media satellite navigation system. App-Connect comprises MirrorLink™, CarPlay™ and Android Auto™. The availability of these technologies can vary depending on the country in question. Please note that App-Connect is not currently supported by all mobile telephones on the market. Volkswagen is working closely with major smartphone producers to promote broader compatibility for App-Connect.
2 Available as an option, mobile online services (Car-Net) is only available in conjunction with the Discover Media satellite navigation system. You will also require a mobile device that is capable of acting as a mobile wireless hotspot. Car-Net services are only available with an existing mobile network contract or one to be agreed separately for this purpose between you and your mobile phone network provider and only within the respective mobile phone network coverage. Depending on your mobile phone tariff, receiving data from the internet may incur additional charges, particularly if you are using the phone abroad. Due to the amount of data needed when using Car-Net services, we strongly recommend signing-up to a data flat rate with your mobile phone provider. Use of Car-Net is governed in a separate agreement with Volkswagen AG online. After taking possession of the vehicle, you have 90 days in which to register the vehicle at www.volkswagen-commercial-vehicles-carnet.com. The availability of Car-Net services may vary depending on the country in question. These services are available for the duration of the contract term agreed and may be subject to changes in terms of content during the contract period. More detailed information on Car-Net is available at www.volkswagen-commercial-vehicles-carnet.com and from your Volkswagen Commercial Vehicles Van Centre. Contact your mobile network provider for information regarding your mobile network tariff.
3 Available at participating petrol stations and car parks.

Engine & gearbox data.

Engine specifications.	2.0TSI 150PS	2.0TSI 204PS	2.0TDI 84PS	2.0TDI 102PS	2.0TDI 150PS	2.0BiTDI 204PS
Engine type	Petrol, transverse, water-cooled, in-line, variable turbine geometry turbocharger with intercooler	Petrol, transverse, water-cooled, in-line, variable turbine geometry turbocharger with intercooler	Diesel, transverse, water-cooled, in-line, variable turbine geometry turbocharger with intercooler	Diesel, transverse, water-cooled, in-line, variable turbine geometry turbocharger with intercooler	Diesel, transverse, water-cooled, in-line, variable turbine geometry turbocharger with intercooler	Diesel, transverse, water-cooled, in-line, bi-turbo with intercooler
Mixture preparation/ injection method	Petrol, direct injection	Petrol, direct injection	Common-rail, direct injection	Common-rail, direct injection	Common-rail, direct injection	Common-rail, direct injection
EU exhaust emission standard	EURO 6	EURO 6	EURO 6	EURO 6	EURO 6	EURO 6
Number of cylinders	4	4	4	4	4	4
Cubic capacity	1,984cc	1,984cc	1,968cc	1,968cc	1,968cc	1,968cc
Output, PS at rpm	150 at 3,750-6,000	204 at 4,200-6000	84 at 2,750-3,750	102 at 3,000-3,750	150 at 3,250-3,750	204 at 4,000
Torque, max. Nm at rpm	280 at 1,500-3,750	350 at 1,500-4,000	220 at 1,250-2,500	250 at 1,500-2,750	340 at 1,500-3,000	450 at 1,400-2,400
Fuel tank capacity	80 litre	80 litre	70 litre	70 litre	70 litre	70 litre
AdBlue® capacity	–	–	13 litre	13 litre	13 litre	13 litre
Diesel Particulate Filter [DPF]	–	–	●	●	●	●
5-speed manual gearbox	–	–	●	●	–	–
6-speed manual gearbox	●	–	–	–	●	–
7-speed dual clutch gearbox [DSG]	–	●	–	–	○	●
Front-wheel drive	●	●	●	●	●	●
4MOTION all-wheel drive	–	–	–	–	○	○
Alternator	140A [1]	140A [1]	140A	140A [1]	140A [1]	140A
Battery - manual	75Ah (420A)	–	75Ah (420A)	75Ah (420A)	75Ah (420A)	–
Battery - DSG	–	75Ah (420A)	–	–	75Ah (420A)	75Ah (420A)

● Standard ○ Available – Not available 1 Highline models feature a 180A alternator.

Panel van fuel consumption, performance and emissions.

Short wheelbase with low roof.

		Urban mpg (ltr/100km)[1]	Extra-Urban mpg (ltr/100km)[1]	Combined mpg (ltr/100km)[1]	Acceleration, secs 0 - 62mph	Top speed, mph[2]	CO_2 emissions, g/km[1]
Startline – Short wheelbase with low roof.							
T26	2.0TDI 84PS EU6 5-speed manual	38.7 (7.3)	54.3 (5.2)	47.1 (6.0)	19.7	91	156
T28	2.0TSI 150PS EU6 6-speed manual	23.2 (12.2)	38.2 (7.4)	31.0 (9.1)	11.0	113	208
	2.0TDI 84PS EU6 5-speed manual	38.7 (7.3)	54.3 (5.2)	47.1 (6.0)	19.7	91	156
	2.0TDI 102PS EU6 5-speed manual	38.7 (7.3)	54.3 (5.2)	47.1 (6.0)	15.3	98	156
	2.0TDI 150PS EU6 6-speed manual	38.7 (7.3)	52.3 (5.4)	46.3 (6.1)	11.1	113	159
T30	2.0TSI 150PS EU6 6-speed manual	23.2 (12.2)	38.2 (7.4)	31.0 (9.1)	11.0	113	208
	2.0TDI 102PS EU6 5-speed manual	38.7 (7.3)	54.3 (5.2)	47.1 (6.0)	15.3	98	156
	2.0TDI 150PS EU6 6-speed manual	38.7 (7.3)	52.3 (5.4)	46.3 (6.1)	11.1	113	159
T32	2.0TDI 150PS EU6 6-speed manual	38.2 (7.4)	51.4 (5.5)	45.6 (6.2)	11.1	113	161
	2.0TDI 150PS EU6 7-speed DSG	42.2 (6.7)	51.4 (5.5)	47.9 (5.9)	11.2	112	155
BlueMotion – Short wheelbase with low roof.							
T27	2.0TDI 102PS EU6 5-speed manual BM	40.9 (6.9)	58.9 (4.8)	51.4 (5.5)	–	62	145
Trendline – Short wheelbase with low roof.							
T28	2.0TSI 150PS EU6 6-speed manual	23.2 (12.2)	38.2 (7.4)	31.0 (9.1)	11.0	113	208
	2.0TDI 102PS EU6 5-speed manual	38.7 (7.3)	54.3 (5.2)	47.1 (6.0)	15.3	98	156
	2.0TDI 150PS EU6 6-speed manual	38.7 (7.3)	52.3 (5.4)	46.3 (6.1)	11.1	113	159
T30	2.0TSI 150PS EU6 6-speed manual	23.2 (12.2)	38.2 (7.4)	31.0 (9.1)	11.0	113	208
	2.0TDI 102PS EU6 5-speed manual	38.7 (7.3)	54.3 (5.2)	47.1 (6.0)	15.3	98	156
	2.0TDI 150PS EU6 6-speed manual	38.7 (7.3)	52.3 (5.4)	46.3 (6.1)	11.1	113	159
T32	2.0TDI 150PS EU6 6-speed manual	38.2 (7.4)	50.4 (5.6)	44.8 (6.3)	11.1	113	164

		Urban mpg (ltr/100km)[1]	Extra-Urban mpg (ltr/100km)[1]	Combined mpg (ltr/100km)[1]	Acceleration, secs 0 - 62mph	Top speed, mph[2]	CO_2 emissions, g/km[1]
Highline – Short wheelbase with low roof.							
T28	2.0TSI 150PS EU6 6-speed manual	23.2 (12.2)	38.2 (7.4)	31.0 (9.1)	11.0	113	208
	2.0TSI 204PS EU6 7-speed DSG	24.4 (11.6)	37.7 (7.5)	31.4 (9.0)	8.8	126	206
	2.0TDI 102PS EU6 5-speed manual	38.7 (7.3)	54.3 (5.2)	47.1 (6.0)	15.3	98	156
	2.0TDI 150PS EU6 6-speed manual	38.2 (7.4)	51.4 (5.5)	45.6 (6.2)	11.1	113	162
	2.0TDI 150PS EU6 7-speed DSG	42.2 (6.7)	51.4 (5.5)	47.1 (6.0)	11.2	112	156
T30	2.0TSI 150PS EU6 6-speed manual	23.2 (12.2)	38.2 (7.4)	31.0 (9.1)	11.0	113	208
	2.0TSI 204PS EU6 7-speed DSG	24.4 (11.6)	37.7 (7.5)	31.4 (9.0)	8.8	126	206
	2.0TDI 102PS EU6 5-speed manual	38.7 (7.3)	54.3 (5.2)	47.1 (6.0)	15.3	98	156
	2.0TDI 150PS EU6 6-speed manual	38.2 (7.4)	51.4 (5.5)	45.6 (6.2)	11.1	113	162
	2.0TDI 150PS EU6 7-speed DSG	42.2 (6.7)	51.4 (5.5)	47.1 (6.0)	11.2	112	156
	2.0BiTDI 204PS EU6 7-speed DSG	39.8 (7.1)	50.4 (5.6)	45.6 (6.2)	8.9	126	161
T32	2.0TSI 150PS EU6 6-speed manual	23.0 (12.3)	37.7 (7.5)	30.7 (9.2)	11.0	113	210
	2.0TSI 204PS EU6 7-speed DSG	24.4 (11.6)	37.7 (7.5)	31.4 (9.0)	8.8	126	206
	2.0TDI 150PS EU6 6-speed manual	38.2 (7.4)	50.4 (5.6)	44.8 (6.3)	11.1	113	164
	2.0TDI 150PS EU6 7-speed DSG	41.5 (6.8)	49.6 (5.7)	46.3 (6.1)	11.2	112	158
	2.0TDI 150PS EU6 4MOTION 6-speed manual	34.9 (8.1)	47.9 (5.9)	42.2 (6.7)	11.3	111	175
	2.0BiTDI 204PS EU6 7-speed DSG	39.2 (7.2)	49.6 (5.7)	45.6 (6.2)	8.9	126	163
	2.0BiTDI 204PS EU6 4MOTION 7-speed DSG	36.7 (7.7)	46.3 (6.1)	42.2 (6.7)	9.1	124	174
Edition – Short wheelbase with low roof.							
T30	2.0TDI 150PS EU6 6-speed manual	38.7 (7.3)	52.3 (5.4)	46.3 (6.1)	11.1	113	159
	2.0TDI 150PS EU6 7-speed DSG	42.2 (6.7)	51.4 (5.5)	47.1 (6.0)	11.2	112	156
	2.0BiTDI 204PS EU6 7-speed DSG	39.8 (7.1)	50.4 (5.6)	45.6 (6.2)	8.9	126	161
Sportline – Short wheelbase with low roof.							
T32	2.0BiTDI 204PS EU6 7-speed DSG	39.2 (7.2)	49.6 (5.7)	45.6 (6.2)	8.9	126	163

1 Fuel consumption and CO_2 figures are obtained under standardised EU test conditions. This allows a direct comparison between different manufacturer models but may not represent the actual fuel consumption achieved in 'real world' driving conditions. In addition to the fuel efficiency of a vehicle, driving behaviour as well as other non-technical factors (such as environmental conditions, including weather and traffic) play a role in determining a vehicle's fuel consumption and CO_2 emissions. More information is available at www.dft.gov.uk/vca. Other factors including Gross Vehicle Weight, trimline, extra equipment, options and accessories (wheels, tyres, etc.) may change vehicle parameters such as the weight, rolling resistance of the tyres and the aerodynamics and thus influence the fuel consumption, CO_2 emissions and driving performance values.
2 Where the law permits.

Panel van fuel consumption, performance and emissions (continued).

Long wheelbase with low roof.

	Startline – Long wheelbase with low roof.	Urban mpg (ltr/100km)[1]	Extra-Urban mpg (ltr/100km)[1]	Combined mpg (ltr/100km)[1]	Acceleration, secs 0 - 62mph	Top speed, mph[2]	CO_2 emissions, g/km[1]
T28	2.0TSI 150PS EU6 6-speed manual	23.2 (12.2)	38.2 (7.4)	31.0 (9.1)	11.0	113	208
	2.0TDI 102PS EU6 5-speed manual	38.7 (7.3)	54.3 (5.2)	47.1 (6.0)	15.3	98	156
	2.0TDI 150PS EU6 6-speed manual	38.2 (7.4)	51.4 (5.5)	45.6 (6.2)	11.1	113	162
T30	2.0TSI 150PS EU6 6-speed manual	23.2 (12.2)	38.2 (7.4)	31.0 (9.1)	11.0	113	208
	2.0TDI 102PS EU6 5-speed manual	38.7 (7.3)	54.3 (5.2)	47.1 (6.0)	15.3	98	156
	2.0TDI 150PS EU6 6-speed manual	38.2 (7.4)	51.4 (5.5)	45.6 (6.2)	11.1	113	162
T32	2.0TDI 102PS EU6 5-speed manual	37.7 (7.5)	52.3 (5.4)	45.6 (6.2)	15.3	98	161
	2.0TDI 150PS EU6 6-speed manual	38.2 (7.4)	50.4 (5.6)	44.8 (6.3)	11.1	113	164
	2.0TDI 150PS EU6 7-speed DSG	41.5 (6.8)	49.6 (5.7)	46.3 (6.1)	11.2	112	158

	Trendline – Long wheelbase with low roof.						
T28	2.0TSI 150PS EU6 6-speed manual	23.0 (12.3)	37.7 (7.5)	30.7 (9.2)	11.0	113	210
	2.0TDI 102PS EU6 5-speed manual	38.2 (7.4)	53.3 (5.3)	46.3 (6.1)	15.3	98	159
	2.0TDI 150PS EU6 6-speed manual	38.2 (7.4)	51.4 (5.5)	45.6 (6.2)	11.1	113	162
T30	2.0TSI 150PS EU6 6-speed manual	23.0 (12.3)	37.7 (7.5)	30.7 (9.2)	11.0	113	210
	2.0TDI 102PS EU6 5-speed manual	38.2 (7.4)	53.3 (5.3)	46.3 (6.1)	15.3	98	159
	2.0TDI 150PS EU6 6-speed manual	38.2 (7.4)	51.4 (5.5)	45.6 (6.2)	11.1	113	162
T32	2.0TDI 150PS EU6 6-speed manual	38.2 (7.4)	50.4 (5.6)	44.8 (6.3)	11.1	113	164

	Highline – Long wheelbase with low roof.	Urban mpg (ltr/100km)[1]	Extra-Urban mpg (ltr/100km)[1]	Combined mpg (ltr/100km)[1]	Acceleration, secs 0 - 62mph	Top speed, mph[2]	CO_2 emissions, g/km[1]
T28	2.0TSI 150PS EU6 6-speed manual	23.0 (12.3)	37.7 (7.5)	30.7 (9.2)	11.0	113	210
	2.0TSI 204PS EU6 7-speed DSG	24.4 (11.6)	37.7 (7.5)	31.4 (9.0)	8.8	126	206
	2.0TDI 150PS EU6 6-speed manual	38.2 (7.4)	51.4 (5.5)	45.6 (6.2)	11.1	113	162
	2.0TDI 150PS EU6 7-speed DSG	42.2 (6.7)	51.4 (5.5)	47.1 (6.0)	11.2	112	156
T30	2.0TSI 150PS EU6 6-speed manual	23.0 (12.3)	37.7 (7.5)	30.7 (9.2)	11.0	113	210
	2.0TSI 204PS EU6 7-speed DSG	24.4 (11.6)	37.7 (7.5)	31.4 (9.0)	8.8	126	206
	2.0TDI 102PS EU6 5-speed manual	38.2 (7.4)	53.3 (5.3)	46.3 (6.1)	15.3	98	159
	2.0TDI 150PS EU6 6-speed manual	38.2 (7.4)	51.4 (5.5)	45.6 (6.2)	11.1	113	162
	2.0TDI 150PS EU6 7-speed DSG	42.2 (6.7)	51.4 (5.5)	47.1 (6.0)	11.2	112	156
	2.0BiTDI 204PS EU6 7-speed DSG	38.7 (7.3)	48.7 (5.8)	44.1 (6.4)	8.9	126	166
T32	2.0TSI 150PS EU6 6-speed manual	23.0 (12.3)	37.7 (7.5)	30.7 (9.2)	11.0	113	210
	2.0TSI 204PS EU6 7-speed DSG	24.4 (11.6)	37.7 (7.5)	31.4 (9.0)	8.8	126	206
	2.0TDI 150PS EU6 6-speed manual	38.2 (7.4)	50.4 (5.6)	44.8 (6.3)	11.1	113	164
	2.0TDI 150PS EU6 7-speed DSG	40.4 (7.0)	48.7 (5.8)	45.6 (6.2)	11.2	112	163
	2.0TDI 150PS EU6 4MOTION 6-speed manual	34.9 (8.1)	47.9 (5.9)	42.2 (6.7)	11.3	111	175
	2.0BiTDI 204PS EU6 7-speed DSG	38.2 (7.4)	48.7 (5.8)	43.5 (6.5)	8.9	126	168
	2.0BiTDI 204PS EU6 4MOTION 7-speed DSG	36.2 (7.8)	45.6 (6.2)	41.5 (6.8)	9.1	124	177

	Sportline – Long wheelbase with low roof.						
T32	2.0BiTDI 204PS EU6 7-speed DSG	38.2 (7.4)	48.7 (5.8)	43.5 (6.5)	8.9	126	168

1 Fuel consumption and CO_2 figures are obtained under standardised EU test conditions. This allows a direct comparison between different manufacturer models but may not represent the actual fuel consumption achieved in 'real world' driving conditions. In addition to the fuel efficiency of a vehicle, driving behaviour as well as other non-technical factors (such as environmental conditions, including weather and traffic) play a role in determining a vehicle's fuel consumption and CO_2 emissions. More information is available at www.dft.gov.uk/vca. Other factors including Gross Vehicle Weight, trimline, extra equipment, options and accessories (wheels, tyres, etc.) may change vehicle parameters such as the weight, rolling resistance of the tyres and the aerodynamics and thus influence the fuel consumption, CO_2 emissions and driving performance values.

2 Where the law permits.

Panel van fuel consumption, performance and emissions (continued).

Long wheelbase with high roof.

Startline – Long wheelbase with high roof.		Urban mpg (ltr/100km)[1]	Extra-Urban mpg (ltr/100km)[1]	Combined mpg (ltr/100km)[1]	Acceleration, secs 0 - 62mph	Top speed, mph[2]	CO_2 emissions, g/km[1]
T28	2.0TSI 150PS EU6 6-speed manual	22.8 (12.4)	35.8 (7.9)	29.7 (9.5)	11.3	106	216
	2.0TDI 102PS EU6 5-speed manual	36.7 (7.7)	49.6 (5.7)	44.1 (6.4)	15.5	90	167
	2.0TDI 150PS EU6 6-speed manual	37.7 (7.5)	47.9 (5.9)	43.5 (6.5)	11.6	106	170
T30	2.0TSI 150PS EU6 6-speed manual	22.8 (12.4)	35.8 (7.9)	29.7 (9.5)	11.3	106	216
	2.0TDI 102PS EU6 5-speed manual	36.7 (7.7)	49.6 (5.7)	44.1 (6.4)	15.5	90	167
	2.0TDI 150PS EU6 6-speed manual	37.7 (7.5)	47.9 (5.9)	43.5 (6.5)	11.6	106	170
T32	2.0TDI 102PS EU6 5-speed manual	36.7 (7.7)	49.6 (5.7)	43.5 (6.5)	15.5	90	169
	2.0TDI 150PS EU6 6-speed manual	37.2 (7.6)	47.1 (6.0)	42.8 (6.6)	11.6	106	172
	2.0TDI 150PS EU6 7-speed DSG	40.9 (6.9)	46.3 (6.1)	44.1 (6.4)	11.7	105	166

Trendline – Long wheelbase with high roof.							
T28	2.0TSI 150PS EU6 6-speed manual	22.8 (12.4)	35.8 (7.9)	29.7 (9.5)	11.3	106	216
	2.0TDI 102PS EU6 5-speed manual	36.7 (7.7)	49.6 (5.7)	44.1 (6.4)	15.5	90	167
	2.0TDI 150PS EU6 6-speed manual	37.7 (7.5)	47.9 (5.9)	43.5 (6.5)	11.6	106	170
T30	2.0TSI 150PS EU6 6-speed manual	22.8 (12.4)	35.8 (7.9)	29.7 (9.5)	11.3	106	216
	2.0TDI 102PS EU6 5-speed manual	36.7 (7.7)	49.6 (5.7)	44.1 (6.4)	15.5	90	167
	2.0TDI 150PS EU6 6-speed manual	37.7 (7.5)	47.9 (5.9)	43.5 (6.5)	11.6	106	170
T32	2.0TDI 150PS EU6 6-speed manual	37.2 (7.6)	47.1 (6.0)	42.8 (6.6)	11.6	106	172

Highline – Long wheelbase with high roof.		Urban mpg (ltr/100km)[1]	Extra-Urban mpg (ltr/100km)[1]	Combined mpg (ltr/100km)[1]	Acceleration, secs 0 - 62mph	Top speed, mph[2]	CO_2 emissions, g/km[1]
T28	2.0TSI 150PS EU6 6-speed manual	22.8 (12.4)	35.8 (7.9)	29.7 (9.5)	11.3	106	216
	2.0TSI 204PS EU6 7-speed DSG	24.1 (11.7)	35.3 (8.0)	30.4 (9.3)	8.8	116	213
	2.0TDI 150PS EU6 6-speed manual	37.7 (7.5)	47.9 (5.9)	43.5 (6.5)	11.6	106	170
	2.0TDI 150PS EU6 7-speed DSG	40.9 (6.9)	46.3 (6.1)	44.1 (6.4)	11.7	105	167
T30	2.0TSI 150PS EU6 6-speed manual	22.8 (12.4)	35.8 (7.9)	29.7 (9.5)	11.3	106	216
	2.0TSI 204PS EU6 7-speed DSG	24.1 (11.7)	35.3 (8.0)	30.4 (9.3)	8.8	116	213
	2.0TDI 102PS EU6 5-speed manual	36.7 (7.7)	49.6 (5.7)	44.1 (6.4)	15.5	90	167
	2.0TDI 150PS EU6 6-speed manual	37.7 (7.5)	47.9 (5.9)	43.5 (6.5)	11.6	106	170
	2.0TDI 150PS EU6 7-speed DSG	40.9 (6.9)	46.3 (6.1)	44.1 (6.4)	11.7	105	167
	2.0BiTDI 204PS EU6 7-speed DSG	38.2 (7.4)	46.3 (6.1)	42.8 (6.6)	9.3	117	172
T32	2.0TSI 150PS EU6 6-speed manual	22.8 (12.4)	35.8 (7.9)	29.7 (9.5)	11.3	106	216
	2.0TSI 204PS EU6 7-speed DSG	23.7 (11.9)	34.9 (8.1)	29.7 (9.5)	8.8	116	217
	2.0TDI 150PS EU6 6-speed manual	36.7 (7.7)	46.3 (6.1)	42.2 (6.7)	11.6	106	175
	2.0TDI 150PS EU6 7-speed DSG	40.4 (7.0)	45.6 (6.2)	43.5 (6.5)	11.7	105	169
	2.0TDI 150PS EU6 4MOTION 6-speed manual	34.4 (8.2)	44.1 (6.4)	40.4 (7.0)	11.8	104	184
	2.0BiTDI 204PS EU6 7-speed DSG	38.2 (7.4)	45.6 (6.2)	42.2 (6.7)	9.3	117	174
	2.0BiTDI 204PS EU6 4MOTION 7-speed DSG	35.8 (7.9)	43.5 (6.5)	40.4 (7.0)	9.5	115	183

1 Fuel consumption and CO_2 figures are obtained under standardised EU test conditions. This allows a direct comparison between different manufacturer models but may not represent the actual fuel consumption achieved in 'real world' driving conditions. In addition to the fuel efficiency of a vehicle, driving behaviour as well as other non-technical factors (such as environmental conditions, including weather and traffic) play a role in determining a vehicle's fuel consumption and CO_2 emissions. More information is available at www.dft.gov.uk/vca. Other factors including Gross Vehicle Weight, trimline, extra equipment, options and accessories (wheels, tyres, etc.) may change vehicle parameters such as the weight, rolling resistance of the tyres and the aerodynamics and thus influence the fuel consumption, CO_2 emissions and driving performance values.

2 Where the law permits.

Kombi fuel consumption, performance and emissions.

Short wheelbase with low roof.

	Startline – Short wheelbase with low roof.	Urban mpg (ltr/100km)[1]	Extra-Urban mpg (ltr/100km)[1]	Combined mpg (ltr/100km)[1]	Acceleration, secs 0 - 62mph	Top speed, mph[2]	CO_2 emissions, g/km[1]
T30	2.0TSI 150PS EU6 6-speed manual	23.0 (12.3)	37.7 (7.5)	30.7 (9.2)	11.5	113	210
	2.0TDI 102PS EU6 5-speed manual	38.2 (7.4)	53.3 (5.3)	46.3 (6.1)	16.4	98	159
	2.0TDI 150PS EU6 6-speed manual	38.2 (7.4)	51.4 (5.5)	45.6 (6.2)	11.9	113	162
T32	2.0TDI 150PS EU6 6-speed manual	38.2 (7.4)	50.4 (5.6)	44.8 (6.3)	11.9	113	164

	Trendline – Short wheelbase with low roof.						
T30	2.0TSI 150PS EU6 6-speed manual	23.0 (12.3)	37.7 (7.5)	30.7 (9.2)	11.5	113	210
	2.0TDI 102PS EU6 5-speed manual	38.2 (7.4)	53.3 (5.3)	46.3 (6.1)	16.4	98	159
	2.0TDI 150PS EU6 6-speed manual	38.2 (7.4)	51.4 (5.5)	45.6 (6.2)	11.9	113	162
T32	2.0TDI 150PS EU6 6-speed manual	38.2 (7.4)	50.4 (5.6)	44.8 (6.3)	11.9	113	164

	Highline – Short wheelbase with low roof.	Urban mpg (ltr/100km)[1]	Extra-Urban mpg (ltr/100km)[1]	Combined mpg (ltr/100km)[1]	Acceleration, secs 0 - 62mph	Top speed, mph[2]	CO_2 emissions, g/km[1]
T30	2.0TSI 150PS EU6 6-speed manual	23.0 (12.3)	37.7 (7.5)	30.7 (9.2)	11.5	113	210
	2.0TSI 204PS EU6 7-speed DSG	23.9 (11.8)	37.2 (7.6)	31.0 (9.1)	9.1	126	209
	2.0TDI 102PS EU6 5-speed manual	38.2 (7.4)	53.3 (5.3)	46.3 (6.1)	16.4	98	159
	2.0TDI 150PS EU6 6-speed manual	38.2 (7.4)	51.4 (5.5)	45.6 (6.2)	11.9	113	162
	2.0TDI 150PS EU6 7-speed DSG	42.2 (6.7)	51.4 (5.5)	47.1 (6.0)	12.0	112	156
	2.0BiTDI 204PS EU6 7-speed DSG	38.7 (7.3)	48.7 (5.8)	44.1 (6.4)	9.1	126	166
	2.0BiTDI 204PS EU6 4MOTION 7-speed DSG	36.2 (7.8)	46.3 (6.1)	42.2 (6.7)	9.6	124	175
T32	2.0TSI 150PS EU6 6-speed manual	22.8 (12.4)	37.2 (7.6)	30.4 (9.3)	11.5	113	212
	2.0TSI 204PS EU6 7-speed DSG	23.9 (11.8)	37.2 (7.6)	31.0 (9.1)	9.1	126	209
	2.0TDI 102PS EU6 5-speed manual	37.7 (7.5)	52.3 (5.4)	45.6 (6.2)	16.4	98	161
	2.0TDI 150PS EU6 6-speed manual	36.7 (7.7)	49.6 (5.7)	43.5 (6.5)	11.9	113	169
	2.0TDI 150PS EU6 7-speed DSG	40.4 (7.0)	48.7 (5.8)	45.6 (6.2)	12.0	112	163
	2.0TDI 150PS EU6 4MOTION 6-speed manual	34.4 (8.2)	47.1 (6.0)	41.5 (6.8)	12.2	111	178
	2.0BiTDI 204PS EU6 7-speed DSG	38.2 (7.4)	48.7 (5.8)	43.5 (6.5)	9.1	126	168
	2.0BiTDI 204PS EU6 4MOTION 7-speed DSG	36.2 (7.8)	45.6 (6.2)	41.5 (6.8)	9.6	124	177

	Edition – Short wheelbase with low roof.						
T30	2.0TDI 150PS EU6 6-speed manual	38.2 (7.4)	51.4 (5.5)	45.6 (6.2)	11.9	113	162
	2.0TDI 150PS EU6 7-speed DSG	42.2 (6.7)	51.4 (5.5)	47.1 (6.0)	12.0	112	156

	Sportline – Short wheelbase with low roof.						
T32	2.0BiTDI 204PS EU6 7-speed DSG	38.2 (7.4)	48.7 (5.8)	43.5 (6.5)	9.1	126	168

1 Fuel consumption and CO_2 figures are obtained under standardised EU test conditions. This allows a direct comparison between different manufacturer models but may not represent the actual fuel consumption achieved in 'real world' driving conditions. In addition to the fuel efficiency of a vehicle, driving behaviour as well as other non-technical factors (such as environmental conditions, including weather and traffic) play a role in determining a vehicle's fuel consumption and CO_2 emissions. More information is available at www.dft.gov.uk/vca. Other factors including Gross Vehicle Weight, trimline, extra equipment, options and accessories (wheels, tyres, etc.) may change vehicle parameters such as the weight, rolling resistance of the tyres and the aerodynamics and thus influence the fuel consumption, CO_2 emissions and driving performance values.
2 Where the law permits.

Kombi fuel consumption, performance and emissions (continued).

Long wheelbase with low roof.

	Startline – Long wheelbase with low roof.	Urban mpg (ltr/100km)[1]	Extra-Urban mpg (ltr/100km)[1]	Combined mpg (ltr/100km)[1]	Acceleration, secs 0 - 62mph	Top speed, mph[2]	CO_2 emissions, g/km[1]
T32	2.0TDI 102PS EU6 5-speed manual	37.7 (7.5)	52.3 (5.4)	45.6 (6.2)	16.4	98	161
	2.0TDI 150PS EU6 6-speed manual	36.7 (7.7)	49.6 (5.7)	43.5 (6.5)	11.9	113	169
	Trendline – Long wheelbase with low roof.						
T32	2.0TDI 102PS EU6 5-speed manual	37.7 (7.5)	52.3 (5.4)	45.6 (6.2)	16.4	98	161
	2.0TDI 150PS EU6 6-speed manual	36.7 (7.7)	49.6 (5.7)	43.5 (6.5)	11.9	113	169
	Highline – Long wheelbase with low roof.						
T32	2.0TSI 150PS EU6 6-speed manual	22.8 (12.4)	37.2 (7.6)	30.4 (9.3)	11.5	113	212
	2.0TSI 204PS EU6 7-speed DSG	23.9 (11.8)	37.2 (7.6)	31.0 (9.1)	9.1	126	209
	2.0TDI 150PS EU6 6-speed manual	36.7 (7.7)	49.6 (5.7)	43.5 (6.5)	11.9	113	169
	2.0TDI 150PS EU6 7-speed DSG	40.4 (7.0)	48.7 (5.8)	45.6 (6.2)	12.0	112	163
	2.0TDI 150PS EU6 4MOTION 6-speed manual	34.4 (8.2)	47.1 (6.0)	41.5 (6.8)	12.2	111	178
	2.0BiTDI 204PS EU6 7-speed DSG	37.2 (7.6)	47.1 (6.0)	42.8 (6.6)	9.1	126	171
	2.0BiTDI 204PS EU6 4MOTION 7-speed DSG	36.2 (7.8)	45.6 (6.2)	41.5 (6.8)	9.6	124	177
	Sportline – Long wheelbase with low roof.						
T32	2.0BiTDI 204PS EU6 7-speed DSG	37.2 (7.6)	47.1 (6.0)	42.8 (6.6)	9.1	126	171

Long wheelbase with high roof.

	Startline – Long wheelbase with high roof.	Urban mpg (ltr/100km)[1]	Extra-Urban mpg (ltr/100km)[1]	Combined mpg (ltr/100km)[1]	Acceleration, secs 0 - 62mph	Top speed, mph[2]	CO_2 emissions, g/km[1]
T32	2.0TDI 102PS EU6 5-speed manual	35.8 (7.9)	48.7 (5.8)	42.8 (6.6)	16.6	90	172
	2.0TDI 150PS EU6 6-speed manual	36.7 (7.7)	46.3 (6.1)	42.2 (6.7)	12.2	106	175
	Trendline – Long wheelbase with high roof.						
T32	2.0TDI 102PS EU6 5-speed manual	35.8 (7.9)	48.7 (5.8)	42.8 (6.6)	16.6	90	172
	2.0TDI 150PS EU6 6-speed manual	36.7 (7.7)	46.3 (6.1)	42.2 (6.7)	12.2	106	175
	Highline – Long wheelbase with high roof.						
T32	2.0TSI 150PS EU6 6-speed manual	22.6 (12.5)	35.3 (8.0)	29.4 (9.6)	11.8	106	218
	2.0TSI 204PS EU6 7-speed DSG	23.3 (12.1)	34.0 (8.3)	29.1 (9.7)	9.4	116	221
	2.0TDI 150PS EU6 6-speed manual	36.7 (7.7)	46.3 (6.1)	42.2 (6.7)	12.2	106	175
	2.0TDI 150PS EU6 7-speed DSG	39.8 (7.1)	44.8 (6.3)	42.8 (6.6)	12.3	105	172
	2.0TDI 150PS EU6 4MOTION 6-speed manual	34.4 (8.2)	44.1 (6.4)	40.4 (7.0)	12.7	104	184
	2.0BiTDI 204PS EU6 7-speed DSG	37.2 (7.6)	44.8 (6.3)	41.5 (6.8)	9.5	117	177
	2.0BiTDI 204PS EU6 4MOTION 7-speed DSG	35.8 (7.9)	43.5 (6.5)	40.4 (7.0)	10.0	115	183

1 Fuel consumption and CO_2 figures are obtained under standardised EU test conditions. This allows a direct comparison between different manufacturer models but may not represent the actual fuel consumption achieved in 'real world' driving conditions. In addition to the fuel efficiency of a vehicle, driving behaviour as well as other non-technical factors (such as environmental conditions, including weather and traffic) play a role in determining a vehicle's fuel consumption and CO_2 emissions. More information is available at www.dft.gov.uk/vca. Other factors including Gross Vehicle Weight, trimline, extra equipment, options and accessories (wheels, tyres, etc.) may change vehicle parameters such as the weight, rolling resistance of the tyres and the aerodynamics and thus influence the fuel consumption, CO_2 emissions and driving performance values.

2 Where the law permits.

Kombi fuel consumption, performance and emissions (continued).

Long wheelbase with high roof.

		Urban mpg (ltr/100km)[1]	Extra-Urban mpg (ltr/100km)[1]	Combined mpg (ltr/100km)[1]	Acceleration, secs 0 - 62mph	Top speed, mph[2]	CO_2 emissions, g/km[1]
Startline – Long wheelbase with high roof.							
T32	2.0TDI 102PS EU6 5-speed manual	35.8 (7.9)	48.7 (5.8)	42.8 (6.6)	16.6	90	172
	2.0TDI 150PS EU6 6-speed manual	36.7 (7.7)	46.3 (6.1)	42.2 (6.7)	12.2	106	175
Trendline – Long wheelbase with high roof.							
T32	2.0TDI 102PS EU6 5-speed manual	35.8 (7.9)	48.7 (5.8)	42.8 (6.6)	16.6	90	172
	2.0TDI 150PS EU6 6-speed manual	36.7 (7.7)	46.3 (6.1)	42.2 (6.7)	12.2	106	175
Highline – Long wheelbase with high roof.							
T32	2.0TSI 150PS EU6 6-speed manual	22.6 (12.5)	35.3 (8.0)	29.4 (9.6)	11.8	106	218
	2.0TSI 204PS EU6 7-speed DSG	23.3 (12.1)	34.0 (8.3)	29.1 (9.7)	9.4	116	221
	2.0TDI 150PS EU6 6-speed manual	36.7 (7.7)	46.3 (6.1)	42.2 (6.7)	12.2	106	175
	2.0TDI 150PS EU6 7-speed DSG	39.8 (7.1)	44.8 (6.3)	42.8 (6.6)	12.3	105	172
	2.0TDI 150PS EU6 4MOTION 6-speed manual	34.4 (8.2)	44.1 (6.4)	40.4 (7.0)	12.7	104	184
	2.0BiTDI 204PS EU6 7-speed DSG	37.2 (7.6)	44.8 (6.3)	41.5 (6.8)	9.5	117	177
	2.0BiTDI 204PS EU6 4MOTION 7-speed DSG	35.8 (7.9)	43.5 (6.5)	40.4 (7.0)	10.0	115	183

Chassis cabs fuel consumption, performance and emissions.

Long wheelbase.

		Urban mpg (ltr/100km)[1]	Extra-Urban mpg (ltr/100km)[1]	Combined mpg (ltr/100km)[1]	Acceleration, secs 0 - 62mph	Top speed, mph[2]	CO_2 emissions, g/km[1]
Single cab.							
T30	2.0TDI 150PS EU6 6-speed manual	37.7 (7.5)	46.3 (6.1)	42.8 (6.6)	15.2	103	173
	2.0TDI 150PS EU6 7-speed DSG	42.2 (6.7)	45.6 (6.2)	44.1 (6.4)	11.5	102	167
T32	2.0TDI 150PS EU6 6-speed manual	37.2 (7.6)	46.3 (6.1)	42.2 (6.7)	15.2	103	175
	2.0TDI 150PS EU6 7-speed DSG	42.2 (6.7)	44.8 (6.3)	43.5 (6.5)	11.5	102	169
Double cab.							
T30	2.0TDI 150PS EU6 6-speed manual	37.7 (7.5)	46.3 (6.1)	42.8 (6.6)	15.9	104	173
	2.0TDI 150PS EU6 7-speed DSG	42.2 (6.7)	45.6 (6.2)	44.1 (6.4)	11.8	103	167
T32	2.0TDI 150PS EU6 6-speed manual	36.2 (7.8)	44.1 (6.4)	40.9 (6.9)	15.9	104	181
	2.0TDI 150PS EU6 7-speed DSG	40.4 (7.0)	43.5 (6.5)	42.2 (6.7)	11.8	103	175

1 Fuel consumption and CO_2 figures are obtained under standardised EU test conditions. This allows a direct comparison between different manufacturer models but may not represent the actual fuel consumption achieved in 'real world' driving conditions. In addition to the fuel efficiency of a vehicle, driving behaviour as well as other non-technical factors (such as environmental conditions, including weather and traffic) play a role in determining a vehicle's fuel consumption and CO_2 emissions. More information is available at www.dft.gov.uk/vca. Other factors including Gross Vehicle Weight, trimline, extra equipment, options and accessories (wheels, tyres, etc.) may change vehicle parameters such as the weight, rolling resistance of the tyres and the aerodynamics and thus influence the fuel consumption, CO_2 emissions and driving performance values.

2 Where the law permits.

Panel van weights.

Short wheelbase.

Model	Engine/transmission	Gross vehicle weight, kg	Axle load limit, front/rear, kg	Trailer weight braked 12%/ unbraked, kg	Gross train weight, kg	Startline. Unladen weight[1], kg	Startline. Payload[2], kg	Trendline. Unladen weight[1], kg	Trendline. Payload[2], kg	Highline. Unladen weight[1], kg	Highline. Payload[2], kg	Edition. Unladen weight[1], kg	Edition. Payload[2], kg	Sportline. Unladen weight[1], kg	Sportline. Payload[2], kg
T26	2.0TDI 84PS EU6 BMT 5-speed manual	2,600	1,500 / 1,400	2,200 / 750	4,800	1,885	715	–	–	–	–	–	–	–	–
T27	2.0TDI 102PS EU6 BMT 5-speed manual	2,700	1,550 / 1,450	1,800 / 750	4,300	1,864	836	–	–	–	–	–	–	–	–
T28	2.0TSI 150PS EU6 BMT 6-speed manual	2,800	1,600 / 1,550	2,500 / 750	5,200	1,883	917	1,917	883	1,946	854	–	–	–	–
	2.0TSI 204PS EU6 BMT 7-speed DSG	2,800	1,600 / 1,550	2,500 / 750	5,300	–	–	–	–	1,976	824	–	–	–	–
	2.0TDI 84PS EU6 BMT 5-speed manual	2,800	1,550 / 1,550	2,200 / 750	4,800	1,885	915	–	–	–	–	–	–	–	–
	2.0TDI 102PS EU6 BMT 5-speed manual	2,800	1,550 / 1,550	2,200 / 750	4,900	1,885	915	1,919	881	1,948	852	–	–	–	–
	2.0TDI 150PS EU6 BMT 6-speed manual	2,800	1,600 / 1,550	2,500 / 750	5,200	1,915	885	1,949	851	1,978	822	–	–	–	–
	2.0BiTDI 204PS EU6 BMT 6-speed manual	2,800	1,600 / 1,550	2,500 / 750	5,200	–	–	–	–	2,012	788	–	–	–	–
	2.0BiTDI 204PS EU6 BMT 7-speed DSG	2,800	1,600 / 1,550	2,500 / 750	5,300	–	–	–	–	2,032	768	–	–	–	–
T30	2.0TSI 150PS EU6 BMT 6-speed manual	3,000	1,600 / 1,625	2,500 / 750	5,200	1,883	1,117	1,917	1,083	1,946	1,054	–	–	–	–
	2.0TSI 204PS EU6 BMT 7-speed DSG	3,000	1,600 / 1,625	2,500 / 750	5,300	–	–	–	–	1,976	1,024	–	–	–	–
	2.0TDI 102PS EU6 BMT 5-speed manual	3,000	1,550 / 1,625	2,200 / 750	4,900	1,885	1,115	1,919	1,081	1,948	1,052	–	–	–	–
	2.0TDI 150PS EU6 BMT 6-speed manual	3,000	1,600 / 1,625	2,500 / 750	5,200	1,915	1,085	1,949	1,051	1,978	1,022	1,940	1,060	–	–
	2.0TDI 150PS EU6 BMT 7-speed DSG	3,000	1,600 / 1,625	2,500 / 750	5,300	–	–	–	–	1,998	1,002	1,961	1,039	–	–
	2.0BiTDI 204PS EU6 BMT 7-speed DSG	3,000	1,600 / 1,625	2,500 / 750	5,300	–	–	–	–	2,032	968	2,006	994	–	–
T32	2.0TSI 150PS EU6 BMT 6-speed manual	3,200	1,710 / 1,720	2,500 / 750	5,200	–	–	–	–	1,972	1,228	–	–	–	–
	2.0TSI 204PS EU6 BMT 7-speed DSG	3,200	1,710 / 1,720	2,500 / 750	5,300	–	–	–	–	1,991	1,209	–	–	–	–
	2.0TDI 150PS EU6 BMT 6-speed manual	3,200	1,710 / 1,720	2,500 / 750	5,200	1,929	1,271	1,963	1,237	1,990	1,210	–	–	–	–
	2.0TDI 150PS EU6 BMT 7-speed DSG	3,200	1,710 / 1,720	2,500 / 750	5,300	1,950	1,250	–	–	2,025	1,175	–	–	–	–
	2.0TDI 150PS EU6 BMT 4MOTION 6-speed manual	3,200	1,710 / 1,720	2,500 / 750	5,300	–	–	–	–	2,112	1,088	–	–	–	–
	2.0BiTDI 204PS EU6 BMT 7-speed DSG	3,200	1,710 / 1,720	2,500 / 750	5,300	–	–	–	–	2,047	1,153	–	–	2,058	1,142
	2.0BiTDI 204PS EU6 BMT 4MOTION 7-speed DSG	3,200	1,710 / 1,720	2,500 / 750	5,300	–	–	–	–	2,157	1,043	–	–	–	–

1 Unladen weight includes approximately 90% fuel load and 75kg for driver.
2 Payload = gross vehicle weight minus unladen weight. Quoted weights are for vehicles with standard specification.
Unladen weight and payload may be influenced by trimline, factory options and Van Centre fitted accessories.
Roof load limit: 100kg (with two roof carriers) or 150kg (with at least four roof carriers) for normal roof only. Trailer nose weight: 100kg.

Panel van weights (continued).

Long wheelbase.

Model	Engine/transmission	Gross vehicle weight, kg	Axle load limit, front/rear, kg	Trailer weight braked 12%/ unbraked, kg	Gross train weight, kg	Startline. Unladen weight[1], kg	Startline. Payload[2], kg	Trendline. Unladen weight[1], kg	Trendline. Payload[2], kg	Highline. Unladen weight[1], kg	Highline. Payload[2], kg	Sportline. Unladen weight[1], kg	Sportline. Payload[2], kg
T28	2.0TSI 150PS EU6 BMT 6-speed manual	2,800	1,600 / 1,550	2,500 / 750	5,200	1,940	860	1,974	826	2,002	798	–	–
	2.0TSI 204PS EU6 BMT 7-speed DSG	2,800	1,600 / 1,550	2,500 / 750	5,300	–	–	–	–	2,033	767	–	–
	2.0TDI 102PS EU6 BMT 5-speed manual	2,800	1,550 / 1,550	2,200 / 750	4,900	1,942	858	1,976	824	–	–	–	–
	2.0TDI 150PS EU6 BMT 6-speed manual	2,800	1,600 / 1,550	2,500 / 750	5,200	1,972	828	2,006	794	2,034	766	–	–
	2.0TDI 150PS EU6 BMT 7-speed DSG	2,800	1,600 / 1,550	2,500 / 750	5,300	–	–	–	–	2,055	745	–	–
T30	2.0TSI 150PS EU6 BMT 6-speed manual	3,000	1,600 / 1,625	2,500 / 750	5,200	1,940	1,060	1,974	1,026	2,002	998	–	–
	2.0TSI 204PS EU6 BMT 7-speed DSG	3,000	1,600 / 1,625	2,500 / 750	5,300	–	–	–	–	2,033	967	–	–
	2.0TDI 102PS EU6 BMT 5-speed manual	3,000	1,550 / 1,625	2,200 / 750	4,900	1,942	1,058	1,976	1,024	2,004	996	–	–
	2.0TDI 150PS EU6 BMT 6-speed manual	3,000	1,600 / 1,625	2,500 / 750	5,200	1,972	1,028	2,006	994	2,034	966	–	–
	2.0TDI 150PS EU6 BMT 7-speed DSG	3,000	1,600 / 1,625	2,500 / 750	5,300	–	–	–	–	2,055	945	–	–
	2.0BiTDI 204PS EU6 BMT 7-speed DSG	3,000	1,600 / 1,625	2,500 / 750	5,300	–	–	–	–	2,088	912	–	–
T32	2.0TSI 150PS EU6 BMT 6-speed manual	3,200	1,710 / 1,720	2,500 / 750	5,200	–	–	–	–	2,029	1,171	–	–
	2.0TSI 204PS EU6 BMT 7-speed DSG	3,200	1,710 / 1,720	2,500 / 750	5,300	–	–	–	–	2,048	1,152	–	–
	2.0TDI 102PS EU6 BMT 5-speed manual	3,200	1,710 / 1,720	2,200 / 750	4,900	1,956	1,244	–	–	–	–	–	–
	2.0TDI 150PS EU6 BMT 6-speed manual	3,200	1,710 / 1,720	2,500 / 750	5,200	1,986	1,214	2,020	1,180	2,047	1,153	–	–
	2.0TDI 150PS EU6 BMT 7-speed DSG	3,200	1,710 / 1,720	2,500 / 750	5,300	2,007	1,193	–	–	2,081	1,119	–	–
	2.0TDI 150PS EU6 BMT 4MOTION 6-speed manual	3,200	1,710 / 1,720	2,500 / 750	5,300	–	–	–	–	2,169	1,031	–	–
	2.0BiTDI 204PS EU6 BMT 7-speed DSG	3,200	1,710 / 1,720	2,500 / 750	5,300	–	–	–	–	2,103	1,097	2,115	1,085
	2.0BiTDI 204PS EU6 BMT 4MOTION 7-speed DSG	3,200	1,710 / 1,720	2,500 / 750	5,300	–	–	–	–	2,213	987	–	–

1 Unladen weight includes approximately 90% fuel load and 75kg for driver.
2 Payload = gross vehicle weight minus unladen weight. Quoted weights are for vehicles with standard specification.
Unladen weight and payload may be influenced by trimline, factory options and Van Centre fitted accessories.
Roof load limit: 100kg (with two roof carriers) or 150kg (with at least four roof carriers) for normal roof only. Trailer nose weight: 100kg.

Kombi weights.

Short wheelbase.

Model	Engine/transmission	Gross vehicle weight, kg	Axle load limit, front/rear, kg	Trailer weight braked 12%/ unbraked, kg	Gross train weight, kg	Startline. Unladen weight[1], kg	Startline. Payload[2], kg	Trendline. Unladen weight[1], kg	Trendline. Payload[2], kg	Highline. Unladen weight[1], kg	Highline. Payload[2], kg	Edition. Unladen weight[1], kg	Edition. Payload[2], kg	Sportline. Unladen weight[1], kg	Sportline. Payload[2], kg
T30	2.0TSI 150PS EU6 6-speed manual	3,000	1,610 / 1,600	2,500 / 750	5,200	2,015	985	2,030	970	2,058	942	–	–	–	–
	2.0TSI 204PS EU6 7-speed DSG	3,000	1,610 / 1,600	2,500 / 750	5,300	–	–	–	–	2,088	912	–	–	–	–
	2.0TDI 102PS EU6 5-speed manual	3,000	1,550 / 1,600	2,200 / 750	4,900	1,982	1,018	1,997	1,003	2,025	975	–	–	–	–
	2.0TDI 150PS EU6 6-speed manual	3,000	1,610 / 1,600	2,500 / 750	5,200	2,012	988	2,027	973	2,055	945	–	–	–	–
	2.0TDI 150PS EU6 7-speed DSG	3,000	1,610 / 1,600	2,500 / 750	5,300	–	–	–	–	2,075	925	–	–	–	–
	2.0TDI 150PS EU6 6-speed manual	3,080	1,610 / 1,575	2,500 / 750	5,200	–	–	–	–	–	–	2,028	1,052	–	–
	2.0TDI 150PS EU6 7-speed DSG	3,080	1,610 / 1,575	2,500 / 750	5,300	–	–	–	–	–	–	2,048	1,032	–	–
	2.0BiTDI 204PS EU6 7-speed DSG	3,000	1,610 / 1,600	2,500 / 750	5,300	–	–	–	–	2,109	891	–	–	–	–
	2.0BiTDI 204PS EU6 4MOTION 7-speed DSG	3,080	1,610 / 1,600	2,500 / 750	5,300	–	–	–	–	2,219	861	–	–	–	–
T32	2.0TSI 150PS EU6 6-speed manual	3,200	1,710 / 1,720	2,500 / 750	5,200	–	–	–	–	2,084	1,116	–	–	–	–
	2.0TSI 204PS EU6 7-speed DSG	3,200	1,710 / 1,720	2,500 / 750	5,300	–	–	–	–	2,103	1,097	–	–	–	–
	2.0TDI 102PS EU6 6-speed manual	3,200	1,710 / 1,720	2,500 / 750	4,900	–	–	–	–	2,051	1,149	–	–	–	–
	2.0TDI 150PS EU6 6-speed manual	3,200	1,710 / 1,720	2,500 / 750	5,200	2,026	1,174	2,041	1,159	2,081	1,119	–	–	–	–
	2.0TDI 150PS EU6 7-speed DSG	3,200	1,710 / 1,720	2,500 / 750	5,300	–	–	–	–	2,102	1,098	–	–	–	–
	2.0TDI 150PS EU6 4MOTION 6-speed manual	3,200	1,710 / 1,720	2,500 / 750	5,300	–	–	–	–	2,203	997	–	–	–	–
	2.0BiTDI 204PS EU6 7-speed DSG	3,200	1,710 / 1,720	2,500 / 750	5,300	–	–	–	–	2,124	1,076	–	–	2,171	1,029
	2.0BiTDI 204PS EU6 4MOTION 7-speed DSG	3,200	1,710 / 1,720	2,500 / 750	5,300	–	–	–	–	2,234	966	–	–	–	–

Long wheelbase.

Model	Engine/transmission	Gross vehicle weight, kg	Axle load limit, front/rear, kg	Trailer weight braked 12%/ unbraked, kg	Gross train weight, kg	Startline. Unladen weight[1], kg	Startline. Payload[2], kg	Trendline. Unladen weight[1], kg	Trendline. Payload[2], kg	Highline. Unladen weight[1], kg	Highline. Payload[2], kg	Sportline. Unladen weight[1], kg	Sportline. Payload[2], kg
T32	2.0TSI 150PS EU6 6-speed manual	3,200	1,710 / 1,720	2,500 / 750	5,200	–	–	–	–	2,147	1,053	–	–
	2.0TSI 204PS EU6 7-speed DSG	3,200	1,710 / 1,720	2,500 / 750	5,300	–	–	–	–	2,166	1,034	–	–
	2.0TDI 102PS EU6 5-speed manual	3,200	1,710 / 1,720	2,200 / 750	4,900	2,059	1,141	2,074	1,126	–	–	–	–
	2.0TDI 150PS EU6 6-speed manual	3,200	1,710 / 1,720	2,500 / 750	5,200	2,089	1,111	2,104	1,096	2,144	1,056	–	–
	2.0TDI 150PS EU6 7-speed DSG	3,200	1,710 / 1,720	2,500 / 750	5,300	–	–	–	–	2,165	1,035	–	–
	2.0TDI 150PS EU6 4MOTION 6-speed manual	3,200	1,710 / 1,720	2,500 / 750	5,300	–	–	–	–	2,266	934	–	–
	2.0BiTDI 204PS EU6 7-speed DSG	3,200	1,710 / 1,720	2,500 / 750	5,300	–	–	–	–	2,187	1,013	2,235	965
	2.0BiTDI 204PS EU6 4MOTION 7-speed DSG	3,200	1,710 / 1,720	2,500 / 750	5,300	–	–	–	–	2,297	903	–	–

1 Unladen weight includes approximately 90% fuel load and 75kg for driver.
2 Payload = gross vehicle weight minus unladen weight. Quoted weights are for vehicles with standard specification.
Unladen weight and payload may be influenced by trimline, factory options and Van Centre fitted accessories.
Roof load limit: 100kg (with two roof carriers) or 150kg (with at least four roof carriers) for normal roof only. Trailer nose weight: 100kg.

Chassis cabs weights.

Long wheelbase single cab.

Model	Engine/transmission	Gross vehicle weight, kg	Axle load limit, front/rear, kg	Trailer weight braked 12%/ unbraked, kg	Gross train weight, kg	Unladen weight[1], kg	Payload[2], kg
T30	2.0TDI 150PS EU6 BMT 6-speed manual	3,000	1,600 / 1,680	2,500 / 750	5,200	1,860	1,140
	2.0TDI 150PS EU6 BMT 7-speed DSG	3,000	1,600 / 1,680	2,500 / 750	5,300	1,880	1,120
T32	2.0TDI 150PS EU6 BMT 6-speed manual	3,200	1,710 / 1,720	2,500 / 750	5,200	1,872	1,328
	2.0TDI 150PS EU6 BMT 7-speed DSG	3,200	1,710 / 1,720	2,500 / 750	5,300	1,892	1,308

Long wheelbase double cab.

Model	Engine/transmission	Gross vehicle weight, kg	Axle load limit, front/rear, kg	Trailer weight braked 12%/ unbraked, kg	Gross train weight, kg	Unladen weight[1], kg	Payload[2], kg
T30	2.0TDI 150PS EU6 BMT 6-speed manual	3,000	1,600 / 1,680	2,500 / 750	5,200	1,965	1,035
	2.0TDI 150PS EU6 BMT 7-speed DSG	3,000	1,600 / 1,680	2,500 / 750	5,300	1,985	1,015
T32	2.0TDI 150PS EU6 BMT 6-speed manual	3,200	1,710 / 1,720	2,500 / 750	5,200	1,977	1,223
	2.0TDI 150PS EU6 BMT 7-speed DSG	3,200	1,710 / 1,720	2,500 / 750	5,300	1,997	1,203

1 Unladen weight includes approximately 90% fuel load and 75kg for driver.
2 Payload = gross vehicle weight minus unladen weight. Quoted weights are for vehicles with standard specification. Unladen weight and payload may be influenced by trimline, factory options and Van Centre fitted accessories.
Roof load limit: 100kg (with two roof carriers) or 150kg (with at least four roof carriers).
Trailer nose weight: 100kg.Roof load limit: 50kg (for single cab) and 75kg (for double cab).

Panel van dimensions.

Short wheelbase low roof.

Roof height		Low
Wheelbase		3,000
Load compartment	length	2,572
	width	1,700
	width between wheel arches	1,244
	height	1,410
	floor area	4.3m²
	load volume	5.8m³
Side sliding door	width	1,017
	height	1,282
Rear wing doors	width	1,473
	height	1,305
Tailgate	width	1,473
	height	1,299
Turning circle (wall to wall)		11.9m

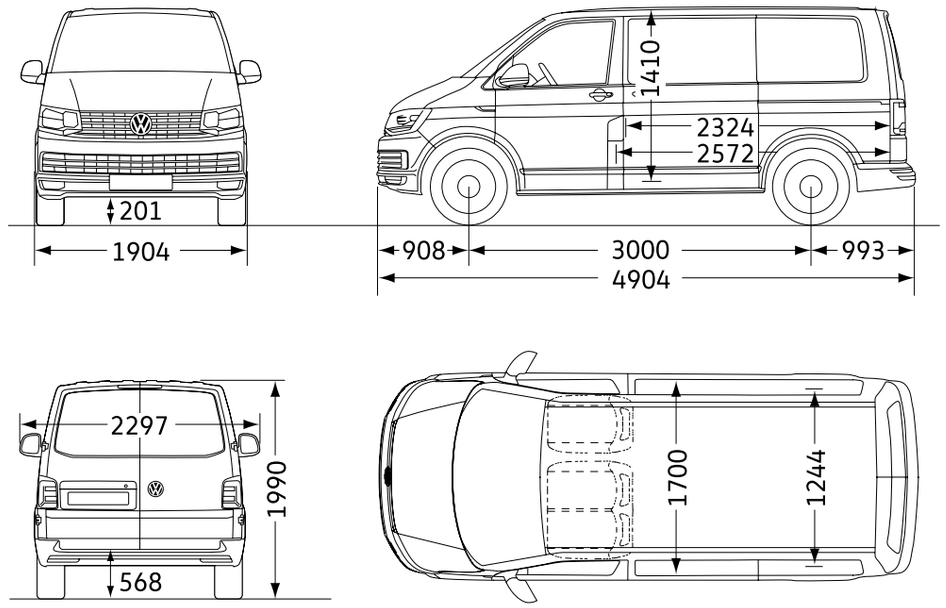

Long wheelbase low and high roof.

Roof height		Low	High[1]
Wheelbase		3,400	3,400
Load compartment	length	2,975	2,975
	width	1,700	1,700
	width between wheel arches	1,244	1,244
	height	1,410	1,940
	floor area	5.0m²	5.0m²
	load volume	6.7m³	9.3m³
Side sliding door	width	1,017	1,017
	height	1,282	1,282
Optional high side sliding door	width	–	1,017
	height	–	1,734
Rear wing doors	width	1,473	1,473
	height	1,305	1,694
Tailgate	width	1,473	–
	height	1,299	–
Turning circle (wall to wall)		13.2m	13.2m

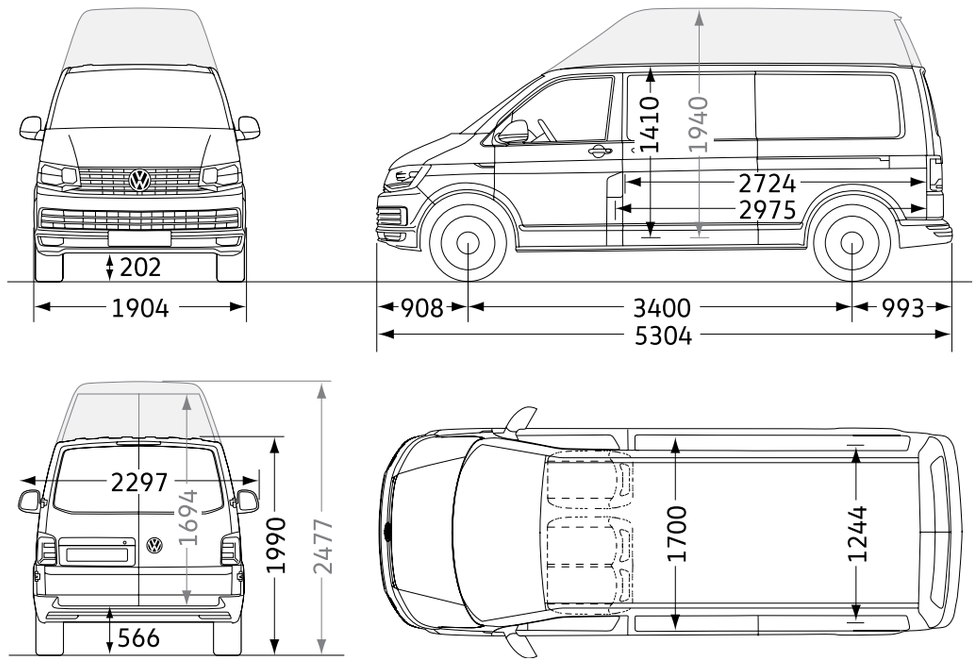

1 Indicates optional high roof.

Please note: Vehicle drawings are not to scale. All dimensions in millimetres (mm), unless otherwise stated.
The height measurements listed may vary by ± 50mm depending on model and equipment fitted.

Kombi dimensions.

Short wheelbase low roof.

Roof height		Low
Wheelbase		3,000
Load compartment	length	2,572
	length behind rear seats	1,600
	width	1,627
	width between wheel arches	1,244
	height	1,397
	floor area	4.3m²
	load volume	5.8m³
Side sliding door	width	1,017
	height	1,264
Rear wing doors	width	1,473
	height	1,305
Tailgate	width	1,473
	height	1,290
Turning circle (wall to wall)		11.9m

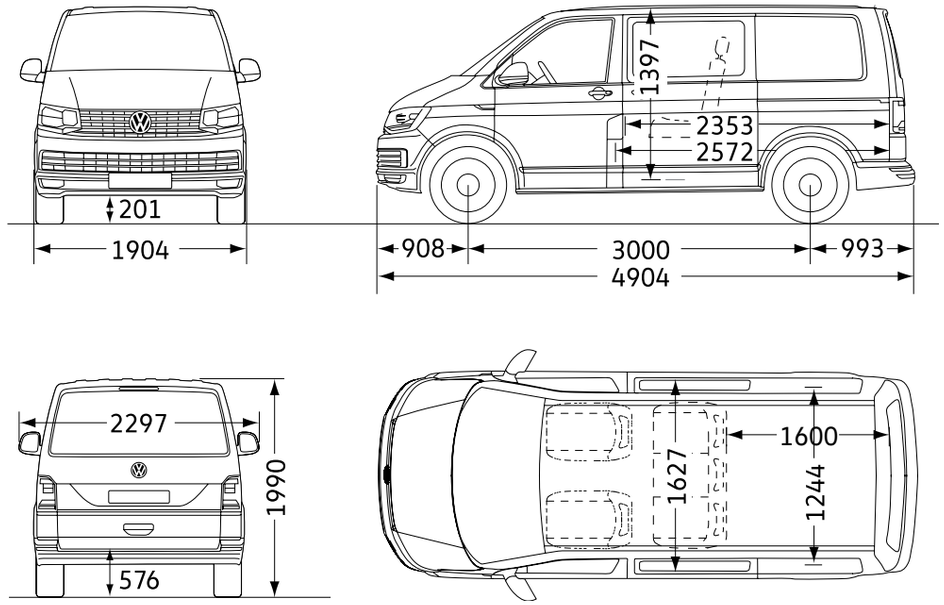

Long wheelbase low and high roof.

Roof height		Low	High[1]
Wheelbase		3,400	3,400
Load compartment	length	2,938	2,938
	length behind rear seats	1,967	1,967
	width	1,627	1,627
	width between wheel arches	1,244	1,244
	height	1,394	1,924
	floor area	5.0m²	5.0m²
	load volume	6.7m³	9.3m³
Side sliding door	width	1,017	1,017
	height	1,264	1,264
Optional high side sliding door	width	–	1,017
	height	–	1,717
Rear wing doors	width	1,473	1,473
	height	1,305	1,694
Tailgate	width	1,473	–
	height	1,290	–
Turning circle (wall to wall)		13.2m	13.2m

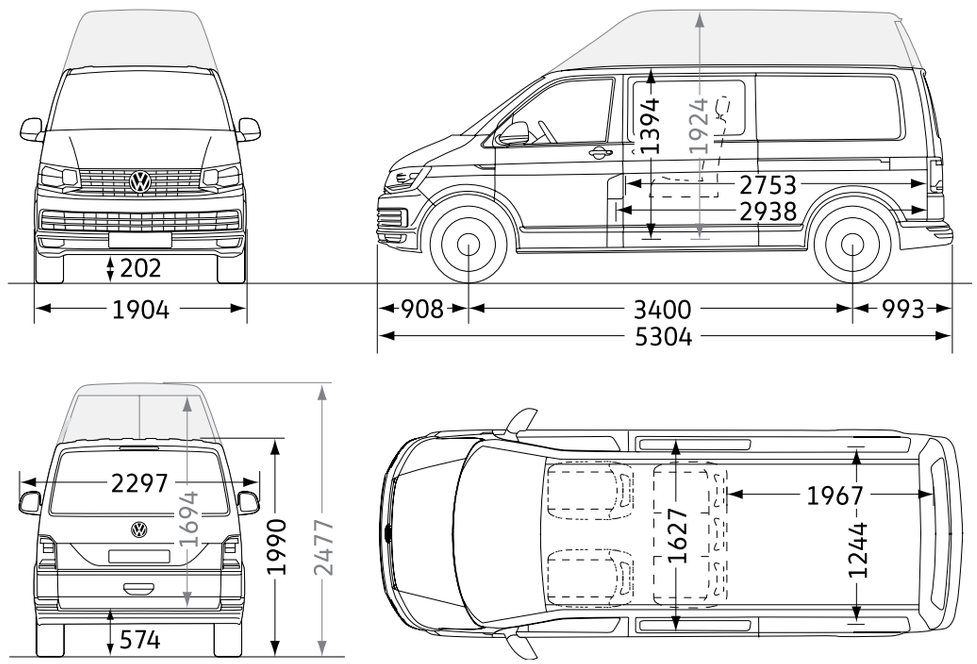

1 Indicates optional high roof.

Please note: Vehicle drawings are not to scale. All dimensions in millimetres (mm), unless otherwise stated.
The height measurements listed may vary by ± 50mm depending on model and equipment fitted.

Chassis cabs dimensions.

Long wheelbase single cab.

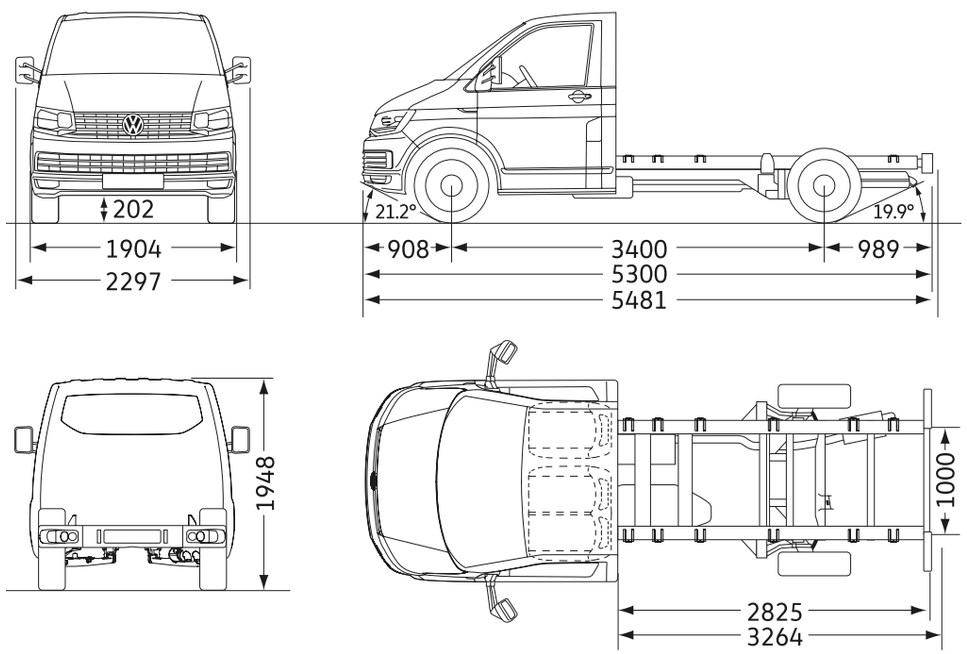

Turning circle (wall to wall)	13.2m

Long wheelbase double cab.

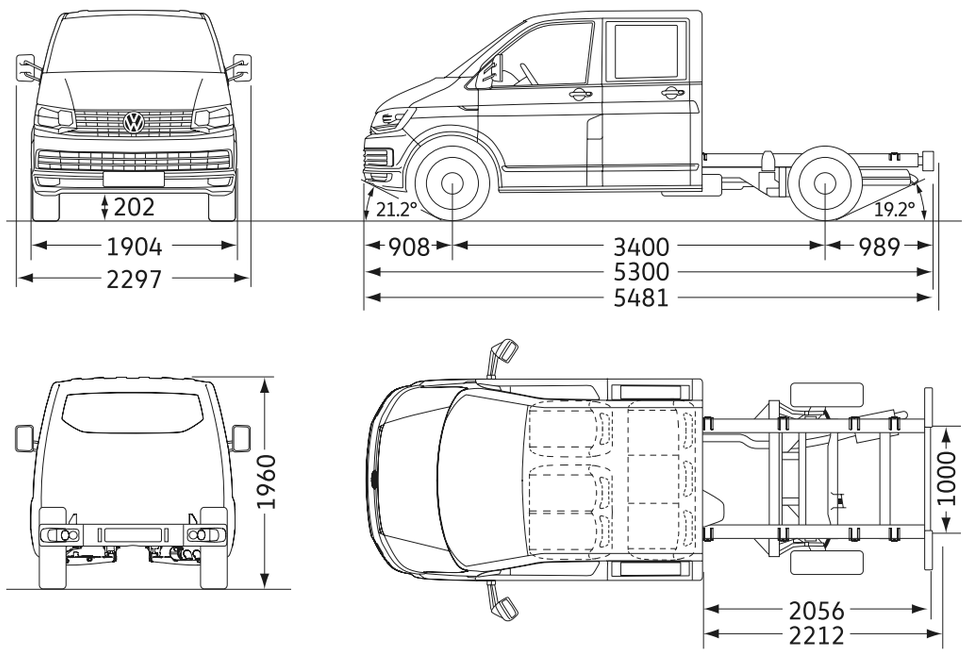

Turning circle (wall to wall)	13.2m

Please note: Vehicle drawings are not to scale. All dimensions in millimetres (mm), unless otherwise stated.
The height measurements listed may vary by ± 50mm depending on model and equipment fitted.

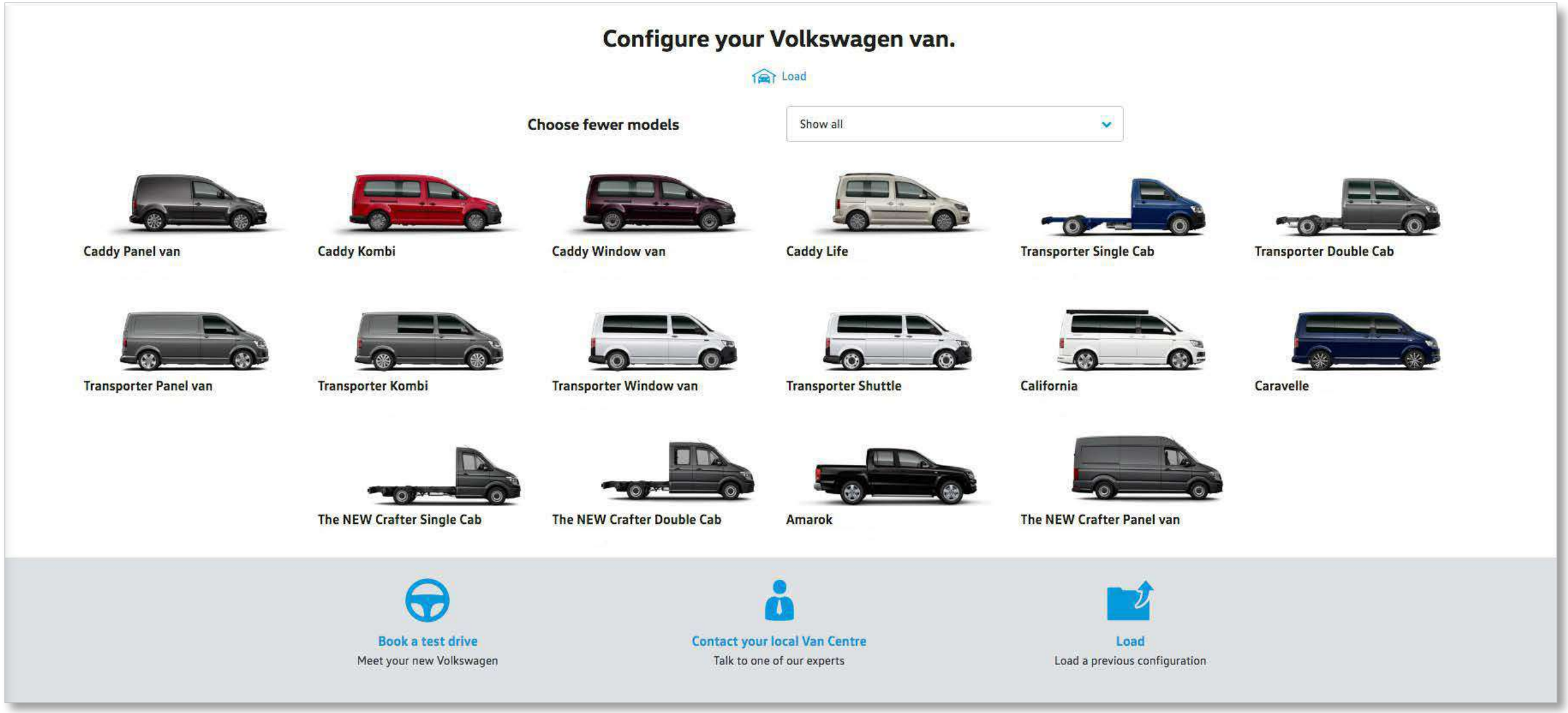

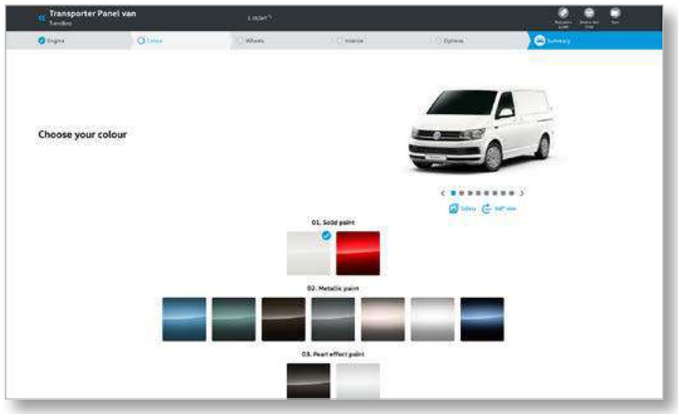

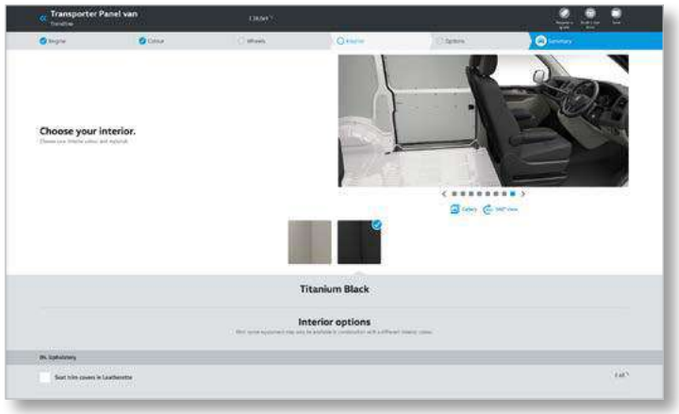

Build your own.

Create your perfect Volkswagen commercial vehicle with the 'build your own' configurator found on our web site by simply clicking on the button above.

Offers & finance.

Learn more about our range of finance products to find a finance package that suits you. Alternatively, take a look at the latest offers available to you.

Cost of your vehicle

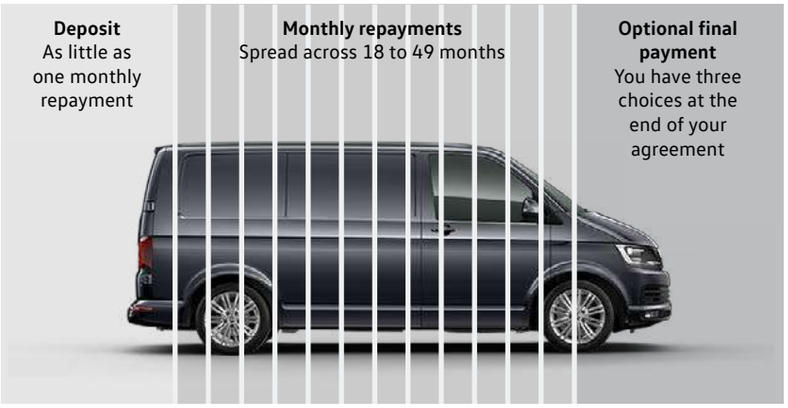

Solutions Personal Contract Plan

Cost of your vehicle

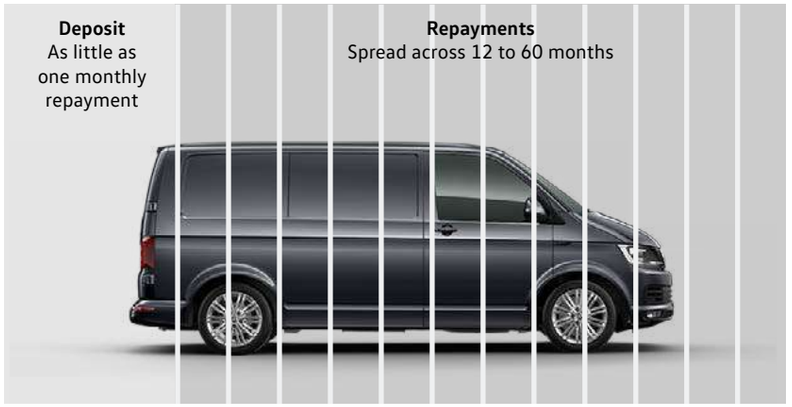

Hire Purchase

Cost of your vehicle

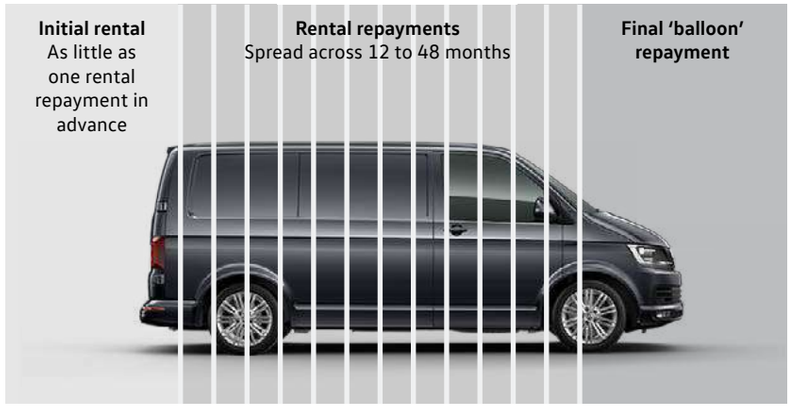

Lease Purchase

Cost of your vehicle

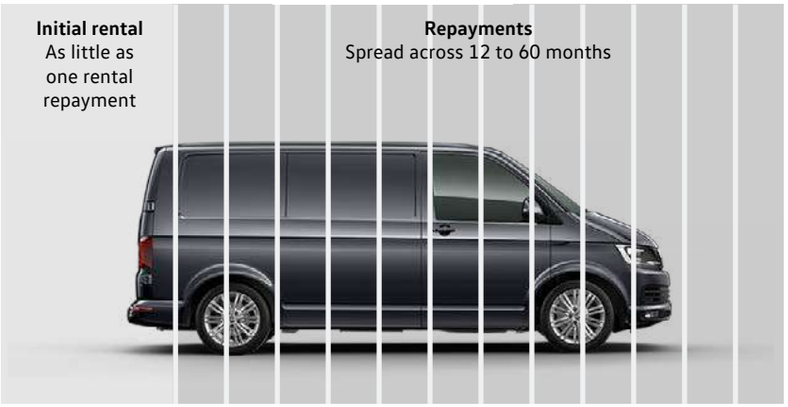

Contract Hire

Cost of your vehicle

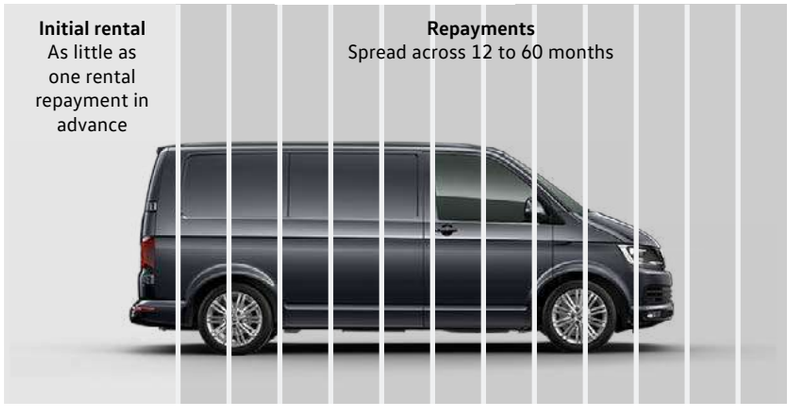

Finance Lease (full pay out)

Cost of your vehicle

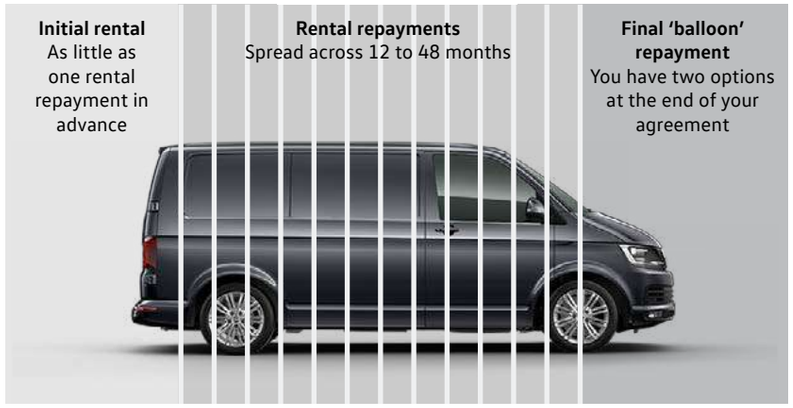

Finance Lease (balloon repayment)

Service & warranties.

Finance and insurance.[1]
When it comes to paying for your van, we've got options including Contract Hire and Finance Lease, or Hire Purchase. We can also offer you competitive insurance.

A choice of packages.[2]
Whether you prefer to lease your vehicles, with none of the concerns of ownership and the freedom to change models easily, or purchase outright to own the vehicle that's perfect for your business, we're here to help you consider your options.

You can go flexible, by choosing a payment plan that suits your finances, with options to reduce your monthly costs and your repayment period. Or choose a fixed monthly price that allows you to budget confidently for the longer term.

You can even include your road tax and servicing costs to arrive at one simple, all-inclusive payment. For more information, pick up a finance brochure, or ask at your Van Centre.

Volkswagen insurance.
Volkswagen Commercial Vehicles Insurance[1] provides cost-effective and comprehensive motor insurance[3], as well as gap insurance[4], which helps replace your vehicle and protect you from any financial shortfall if it's written off.

Insurance benefits include:
- Complimentary 5-day insurance cover to allow you to drive your vehicle away.
- All repairs performed by approved repairers.
- Volkswagen Genuine Parts® used on all repairs.
- Courtesy vehicle provided during repair following an accident.
- Cover for breakage and damage to glass.
- In-vehicle personal belongings cover (up to £250).
- Vehicle recovery.
- 90-day European Union cover.
- Legal expenses cover (up to £100,000).

For more information about motor and gap insurance products, ask at your Van Centre, call **0330 303 6942**, or visit **insurewithvwcv.co.uk.**

Servicing and support.
We're here to keep your business moving, with our range of three award-winning[5] servicing and maintenance options, as well as free Roadside Assistance. Some exclusions apply. For more detail, please visit **www.volkswagen-vans.co.uk/aftersales.**

Pay monthly.
This option is available for vehicles that are less than 12 months old and have covered less than 10,000 miles. It makes budgeting easier by splitting the cost of servicing into fixed monthly payments – whether you want Service only; Service and Maintenance; or Service, Maintenance and Tyres.

Pay upfront.[6]
If you can pay for more than one service upfront, we'll help by reducing your costs. Buy two upfront and you'll receive one interim and one full service at a discounted rate. Buy four and you'll receive two interim and two full services, with your next MOT also included.

Pay on demand.
If you're looking for freedom and flexibility with your servicing, it's good to know we're ready when you are. So with our third option, you can choose to pay for your services as and when you need them, with our National Service Pricing. Ask your Van Centre for an up-to-date pricing guide.

Roadside Assistance.
We understand the need to keep you mobile. That's why all new vans come with three-year, unlimited mileage roadside cover. Should the unexpected happen, one call gets you straight through to a team trained to help you through any breakdown or accident. Supporting you every day will be a team of vehicle technicians, fully-trained by Volkswagen and carrying the latest diagnostic equipment, specialist tools and parts.

Assistance benefits include:
- Assistance at home, by the roadside or place of work.
- Recovery to your preferred location.
- Onward travel, for you and your cargo.
- Cover 24 hours a day, 365 days a year.
- Free cover for three years (on new vehicles).
- Unlimited mileage.
- European cover.
- Option to extend cover beyond three years.

Warranties.
You can count on us long after you purchase your Transporter, thanks to its comprehensive three-year, 100,000 mile warranty. You choose Volkswagen because your business depends on it, year in, year out. While your Transporter is under warranty, we'll fix any defect in manufacture or workmanship free of charge, even if you purchase and service the vehicle at different Van Centres. Some exclusions apply and the vehicle must be cared for using the guidance in your owner's manual. For more detail, please visit **www.volkswagen-vans.co.uk/aftersales.**

Extended warranty.
You can also extend your warranty beyond the three-year, 100,000 mile period, choosing either Comprehensive or Major Component cover, as a one-off or monthly payment. For more detail of cover levels, along with terms and conditions, please visit **volkswagencvwarranty.co.uk** where you'll also be able to obtain a quote and purchase an extended warranty.

Paint and body warranty.
Your Transporter's exterior paintwork is covered against manufacturing defects for a period of three years, while its body sections and panels are covered against rusting through from the inside for 12 years. Some exclusions apply and the vehicle must be cared for using the guidance in your owner's manual.

Add Ons

Accessories to help keep your vehicle 100% Volkswagen

Add extra style, protection and practicality to your van,while still keeping it 100% Volkswagen.

Add more with Add Ons...
Accessories allow you to go beyond options and truly customise your van. You might want extra capacity with roof attachments or a tow bar, add cab technology or even convert a work van into a weekend leisure vehicle.

Keep it 100% Volkswagen.
There are big advantages to purchasing approved accessories from us. Add Ons have all been designed with your Volkswagen in mind, so they're a perfect match for fit and style. They're built to be rugged, reliable and long-lasting.

Keep your Add Ons covered.
Most Add Ons include a two-year warranty, but the great news is that if you order and fit them when you purchase a new van, we may be able to extend that to three years to match your vehicle's warranty. Ask your Van Centre for more detail.

1 Volkswagen Commercial Vehicles Insurance and Volkswagen Commercial Vehicle Financial Services are trading names of Volkswagen Financial Services (UK) Limited, Brunswick Court, Yeomans Drive, Blakelands, Milton Keynes MK14 5LR, which is authorised and regulated by the Financial Conduct Authority (FCA). Registered in England and Wales No. 2835230. Volkswagen Financial Services (UK) Limited financial services register number is 311988.
2 An offer of finance depends on certain conditions. Finance subject to status. Available to 18s and over. Terms and conditions apply. Volkswagen Commercial Vehicle Financial Services.
3 Volkswagen Commercial Vehicles Motor Insurance from Volkswagen Insurance Service (Great Britain) Limited is sold and administered by Ageas Retail Limited. Registered in England and Wales No. 1324965. Registered Office: Ageas House, Hampshire Corporate Park, Templars Way, Eastleigh, Hampshire SO53 3YA. Ageas Retail Limited is authorised and regulated by the Financial Conduct Authority, registration number 312468. Volkswagen Insurance Service (Great Britain) Limited is an appointed representative of Volkswagen Financial Services (UK) Limited.
4 Volkswagen Commercial Vehicle Insurance gap insurance is underwritten by MAPFRE Asistencia Compañìa Internacional de Seguros y Reaseguros Sociedad Anonima authorised by Dirección General de Seguros y Fondos de Pensiones and subject to limited regulation by the Financial Conduct Authority and Prudential Regulation Authority, number 203041. Details about the extent of their regulation by the Financial Conduct Authority and Prudential Regulation Authority are available on request. MAPFRE Asistencia Compañìa Internacional de Seguros y Reaseguros Sociedad Anonima is incorporated and registered in the Kingdom of Spain and registered as a foreign company in the United Kingdom with company number FC021974, acting through its UK branch with branch number BR008042 and whose principal office is at Alpha House, 5th Floor, 24A Lime Street, London EC3M 7HS. Volkswagen Commercial Vehicle Insurance gap insurance is administered by Abraxas Insurance Administration Services Limited, who is authorised and regulated by the Financial Conduct Authority with FCA number 308702 and who acts on behalf of the Insurer. Abraxas Insurance Administration Services Limited is registered in England and Wales with company number: 02928787 and whose registered office is at One Glass Wharf, Bristol BS2 0SX. Volkswagen Financial Services (UK) Limited is authorised and regulated by the Financial Conduct Authority (FCA). Authorisation details can be checked on the Financial Services register at www.fca.org.uk/firms/systems-reporting/register or call 0800 111 6768. Volkswagen Financial Services (UK) Limited is not part of the same corporate group as MAPFRE Asistencia Compañìa International de Seguros y Reaseguros Sociedad Anonima and Abraxas Insurance Administration Service Limited.
5 Business Vans Awards 2014 and 2015: Best Service Package for Van Owners.
6 Class 4 MOT only. This option is available to all new and used vehicles up to four years old or with less than 80,000 miles on the clock. Services must be used consecutively prior to vehicle reaching eight years old.

The Transporter

VWMY18TRANS
This brochure supersedes all previous publications.
Issue: 8 February 2018
www.volkswagen-vans.co.uk

Please note: Screen technology does not allow exact reproduction of the paint and upholstery colours. Some of the vehicles shown are European specification and may be fitted with optional equipment or accessories that are available at extra cost, or do not reflect current specification. All data and specifications are in accordance with information available at the time of publication and are subject to change without notice. Vehicles not currently in UK stock and customer order vehicles may take a number of weeks for delivery. Certain combinations of vehicle specifications and factory-fitted options are not compatible and therefore all orders received are subject to confirmation. Models, factory fitted-options and paint and upholstery options are subject to availability. Please check details and availability with an authorised Volkswagen Van Centre at the time of ordering.

CITROEN VAN SALES

DISCOUNT VAN SALES

PURE VANS

Telephone - 01633-212944
Email - sales@purevans.com

www.purevans.com